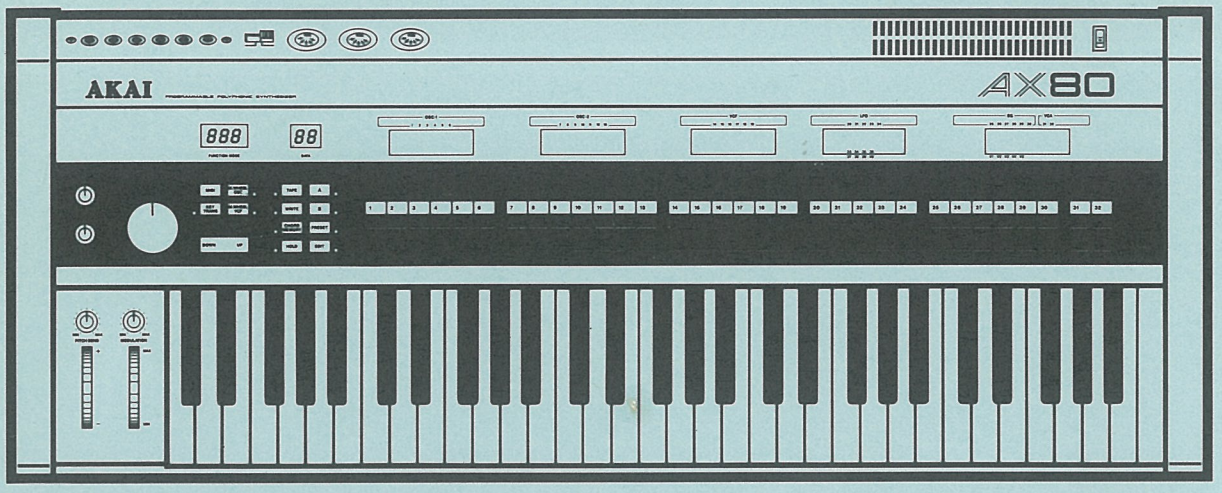

PROGRAMMABLE POLYPHONIC SYNTHESIZER

MODEL AX80

0092

SECTION 1 SERVICE MANUAL
SECTION 2 PARTS LIST
SECTION 3 SCHEMATIC DIAGRAM
SECTION 4 SERVICE BULLETIN

ABBREVIATIONS FOR THE SERVICE MANUAL MODEL AX80

ABBREVIATIONS	EXPLANATION
CTL	ConTroL
D/A	Digital to Analog Converter
DCO	Digital Controlled Oscillator
EG	Envelope Generator
FLD	FLuorescent Display
FREQ	FREQuency
HPF	High Pass Filter
INH	INHibit
INT	INTerrupt
KB-CV	KeyBoard Control Voltage
LFO	Low Frequency Oscillator
MAX	MAXimum
MEMO	MENOry
MIDI	Musical Instrument Digital Interface
MIN	MINimum
MOD	MODuuation
MP	Memory Protection
M.WHEEL	Modulation WHEEL
OSC	OSCillator
PARA	PARAmeter
PRGM	PROGram
PWM	Pulse Width Modulation
RL	Returm Line
ROM	Read Only Memory
S/H	Sample & Hold
SL	Scan Line
SW	SWitch
THRU	THRoUgh
TRANS	TRANSpose
VA	Voltage Analog
VCA	Voltage Controlled Amplifier
VCF	Voltage Controlled Filter
VR	Variable Resistor
VO	VOice

SAFETY CHECK AFTER SERVICING

Confirm the specified insulation resistance between power cord plug prongs and externally exposed parts of the set is greater than 10 Mohms, but for equipment with external antenna terminals (tuner, receiver, etc.) and is intended for [C] or [A], specified insulation resistance should be more than 2.2 Mohms (ground terminals, microphone jacks, headphone jacks. line-in-out jacks etc.)

PRECAUTIONS DURING SERVICING

1. Parts identified by the ⚠ symbol parts are critical for safety.
   Replace only with parts number specified.
2. In addition to safety, other parts and assemblies are specified for conformance with such regulations as those applying to spurious radiation. These must also be replaced only with specified replacements.
   Examples: RF converters, tuner units, antenna selector switches, RF cables, noise blocking capacitors, noise blocking filters, etc.
3. Use specified internal wiring. Note especially:
   1) Wires covered with PVC tubing
   2) Double insulated wires
   3) High voltage leads
4. Use specified insulating materials for hazardous live parts. Note especially:
   1) Insulation Tape
   2) PVC tubing
   3) Spacers (Insulating Barriers)
   4) Insulation sheets for transistors
   5) Plastic screws for fixing microswitch (especially in turntable)
5. When replacing AC primary side components (transformers, power cords, noise blocking capacitors, etc.), wrap ends of wires securely about the terminals before soldering.

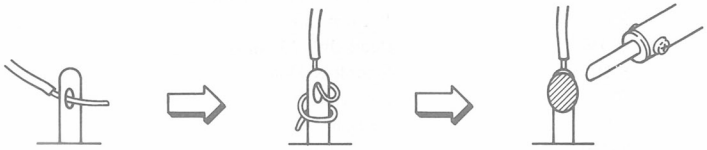

6. Observe that wires do not contact heat producing parts (heatsinks, oxide metal film resistors, fusible resistors, etc.).
7. Check that replaced wires do not contact sharp edged or pointed parts.
8. Also check areas surrounding repaired locations.
9. Use care that foreign objects (screws, solder droplets, etc.) do not remain inside the set.

Voltage conversion

Models for Canada, USA, and Japan are not equipped with this facillity. Each machine is preset at the factory according to its destination, but some machines can be set to 110V, 120V, 220V or 240V as required.
If your machine's voltage can be converted:
Before conmnecting the power cord, trun the VOLTAGE SELECTOR located on the bottom panel with a screwdriver until the correct voltage is indicated.

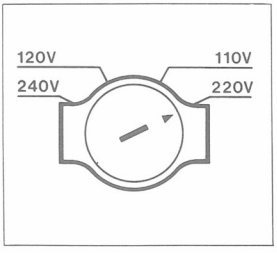

SECTION 1

SERVICE MANUAL

TABLE OF CONTENTS

I. SPECIFICATIONS 4
II. DISMANTLING OF METHOD 5
III. CONTROLS AND UNIT CONNECTIONS 6
IV. THE KEYBOARD RELATIONSHIP TO EQUALLY TEMPERED SCALE FREQUENCES AND MUSICAL NOTATION 8
V. PRINCIPAL PARTS LOCATION 9
VI. AX80 IC BERSIONS 9
VII. ADJUSTMENT PROCEDURE FOR AX80 VOICE PCB 11
1. PREPARATIONFORTHE ADJUSTMENT 11
2. OFFSET ADJUSTMENT (ADJUSTMENT OF SAWTOOTH WAVE LEVEL ON OCO-2) 11
3. ADJUSTMENT OF SAWTOOTH WAVE LEVEL 13
4. RESONANCE FREQUENCY ADJUSTMENT 14
5. LOADING A+B BANK DATA AND CONFIRMATION 14

0092

This Manual is FOR INTERNAL USE ONLY and must not be made available to unauthorized personal. No part of this manual may be reproduced in any form without permission from AKAI-ELECTRIC CO., LTD., Tokyo, Japan.

I. SPECIFICATIONS

Key	61 Key C scale
Voice	8 voice – 16 OSC, 8 Sub Osc
Key touch sense	VCA + VCF
Sample sounds	32 Sounds (Factory programmed)
Memory bank	A and B, each 32 sounds (User programmable)
OSC-1	1. FREQ RANGE (16',8',4') 2. WAVE (OFF, ⟍ , ⎍ ,MIX) 3. PW (DUTY 50% to 90%) 4. PWM speed (Rate 0.1 to 20Hz) 5. SUB OSC (ON,OFF) 6. OSC - 1 Level
OSC-2	7. FREQ RANGE (16', 8' , 4', 2', adjustment by 100 cent steps) 8. Detune (±36 cents) 9. WAVE (OFF, , , MIX) 10. CROSS MOD (OFF, 1, 2) 11. EG depth 12. EG select (VCF, VCA) 13. OSC-2 Level
VCF	14. Cut off freq (less than lOHz, more than 20Hz) 15. Resonance 16. EG depth 17. Key follow (0 to 150%) 18. Key velocity 19. H.P.F.
LFO	20. 33, 37, Depth 21. 34, 38, Speed (0.1 to 20Hz) 22. 35, 39, Delay (0 to 5 sec.) 23. 36, 40, WAVE (⎍ , ⟍ , ⟋ , ⩚)
EG	24. LFO select (OSC-1, OSC-2, VCF) 25. 41 Attack 26. 42 Decay 27. 43 Sustain 28. 44 Release 29. 45 Key follow 30. EG select (VCA, VCA/VCF, VCF) Two independent EG systems enable the following range of settings to be achieved. VCA: 25 29 VCA, VCF: 25 29 VCF: 41 45 31. Key velocity, 32. Level
Tune	±50 cents
Wheel	Modulation (OSC, VCF)/Pitch bend (± 1200 cents in 100 cent steps)
MIDI	Key number, Key velocity, Pitch bender, Program change, Control change (Modulation wheel, Sustain SW), Transmit/Receive channel select
External jack	Audio out OdBv (lV) max (Monophonic), Headphone (Stereo), Sustain pedal, Program up pedal, Tape memory (IN, OUT), MIDI jacks (IN,OUT,THRU)
Dimensions	1,018 (W) x 102 (H) x 392 (D) mm (40.1 x 4.0 x 15.4 inches)
Weight	15.2kg (33.4 lbs)

* For improvement purposes, specifications and design are subject to change without prior notice.

II. DISMANTLING METHOD

2-1. How to open the Front Cover

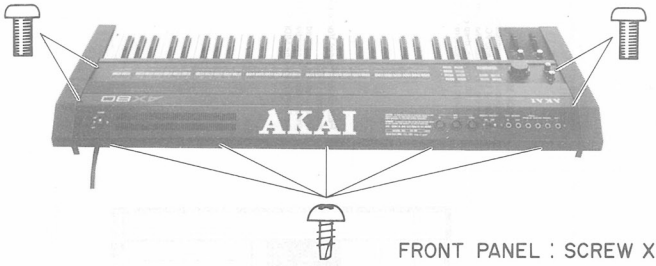

Fig. 2-1

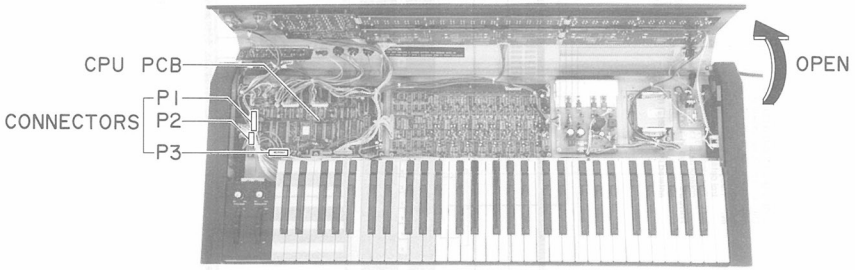

Fig. 2-2

1) Remove nine screws in Fig. 2-1.

2) Open the Front Cover as shown in Fig. 2-2. (Be careful not to damage the wires holding the Front Cover while it is opened)

2-2. How to dismantle the Keyboard Block and bend Panel Block. (Refer to Fig 2-3)

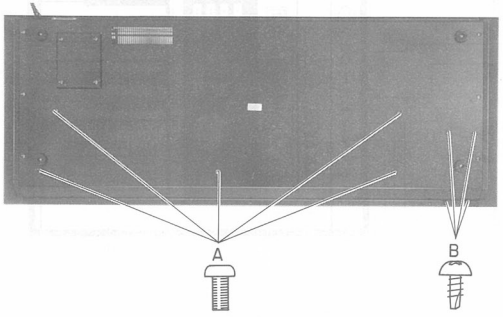

Fig. 2-3

1) Remove the screws in group A (5 screws) for the Keyboard Block, and the screws in group B (4 screws) for the Bend Panel Block (Refer to Fig. 2-3)

2) Then disconnect the connectors P3 on CPU PCB for the Keyboard Block and Pl & P2 for the Bend Panel Block. (Refer to Fig 2-2)

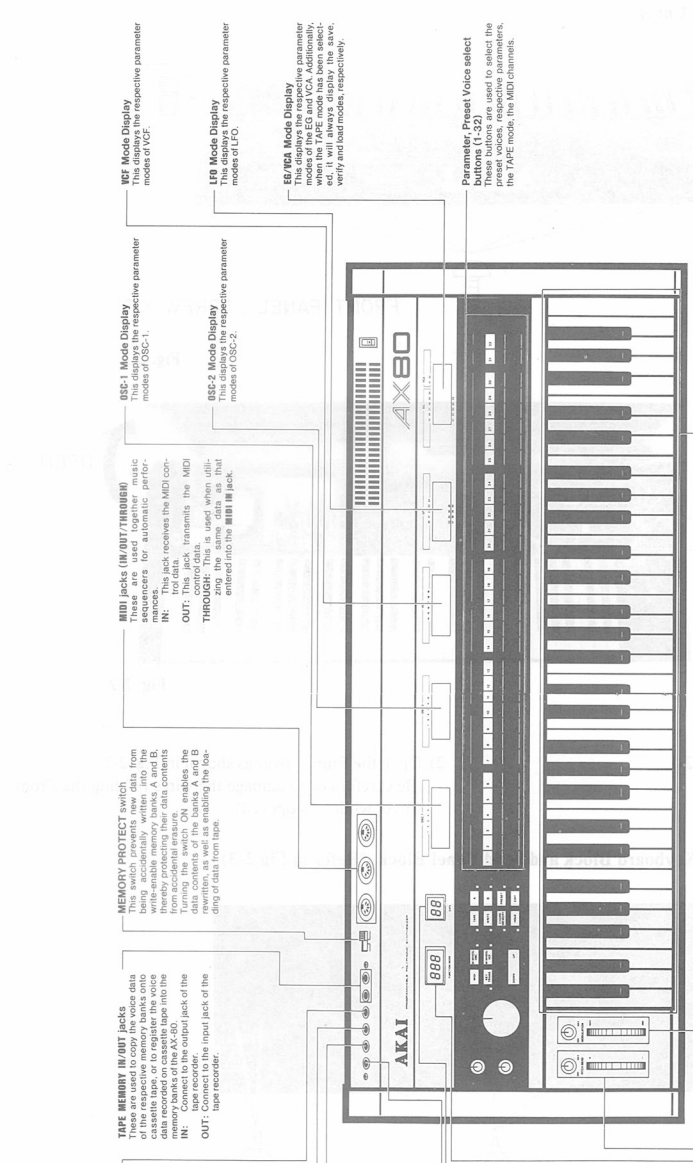
PEDAL PROGM. UP jack
This is used together with the pedal unit to change the preset voice data of the respective memory banks.
* The jack accepts a 6.3 mm diameter phone plug.
PEDAL SUSTAIN jack
This is used together with the pedal unit to turn the sustain on/off. tThe length of the sustain is determined by the SUSTAIN data of the EG parameters.
* The jack accepts a 6.3 mm diameter phone plug.
PHONES jack
This jack is used for connection of a pair of headphones for private monitoring of the sound.
* The jack accepts a 6.3 mm diameter phone plug.
OUTPUT jack
This jack is used to connect the AX80 to the inputs of a keyboard amplifier or a mixer.
* The jack accepts a 6.3 mm diameter phone plug.
DATA display
During the edit mode, the DATA display will display the data of the respective parameters.
FUNCTION MODE display
This displays the function mode of the AX80.
● When either bank A or B has been selected, the number of the selected preset voice number will be displayed.
● During the edit mode -- the parameter number will be displayed.
● During the TAPE mode -- the respective save, verify and load modes will be displayed.
TAPE MEMORY IN/OUT jacks
These are used to copy the voice data of the respective memory banks onto cassette tape, or to load the voice data recorded on cassette tape into the memory banks of the AX-80.
IN: Connect to the output jack of the tape recorder.
OUT: Connect to the input jack of the tape recorder.
MEMORY PROTECT switch
This switch prevents new data from being accidentally written into the memory banks A and B, thereby protecting their data contents from accidental erasure.
Turning the switch ON enables the data contents of the banks A and B rewritten, as well as enabling the loading of data from tape.
MIDI jacks (IN/OUT/THROUGH)
These are used together music sequencers for automatic performances.
IN: This jack receives the MIDI control data.
OUT: This jack transmits the MIDI control data.
THROUGH: This is used when utilizing the same data as that entered into the MIDI IN jack.
PITCH BEND knob and wheel
Use these when the performance of pitch bend effects is desired. The knob is used to set the range of the pitch bend effect. The wheel is used to bend the pitch up or down.
M. WHEEL (Modulation Wheel) knob and wheel
These are used for the performance of modulation effects.
The knob is used to set the range of the modulation depth, and the wheel is used to increase or decrease the depth of the modulation effect.
OSC-1 Mode Display
This displays the respective parameter modes of OSC-1.
OSC-2 Mode Display
This displays the respective parameter modes of OSC-2.
VCF Mode Display
This displays the respective parameter modes of VCF.
LFO Mode Display
This displays the respective parameter modes of LFO.
EG/VCA Mode Display
This displays the respective parameter modes of the EG and VCA. Additionally, when the TAPE mode has been selected, it will always display the save, verify and load modes, respectively.
Parameter, Preset Voice select buttons (1-32)
These buttons are used to select the preset voices, respective parameters, the TAPE mode, the MIDI channels.
Keyboard
This is a 61 key, 6-voice polyphonic keyboard.
AKAI
AX80

Fig. 3-1

TUNE control
This control is used to tune the pitch. At the maximum setting, the tuning can be adjusted over a range of ± 50 cents. Tuning the control towards # will increase the pitch while turning it towards ♭ will decrease the pitch. Normally, leave this control at the center position.

KEY TRANS button and indicator (Key Transpose)
This key is used to transpose the key over a range of ± 1 octave, referenced to C . Press the button once more to cancel the function (the indicator goes out).

EDIT CONTROL UP/DOWN buttons
Use these buttons during the edit mode to change the respective parameter data by one increment at a time. While also functioning as data fine adjustment buttons, during a performance for example, the buttons will also operate as the program UP or program **DOWN** buttons when changing the voice data memorized in bank A, bank B or the PRESET bank, by one increment at a time.

CONTROL knob
This control is used for coarse adjustment to the parameter data during the edit mode.

MIDI button
Use this button to set the MIDI transmission/reception channel. The transmission/reception channel will be initialized to channel 1 when the power is turned on.

M. WHEEL VCF button and indicator (Modulation Wheel Voltage Control Filter)
Use this button to enable the cut-off frequency of the VCF to be controlled by the **M. WHEEL**.
Press this button once again to cancel the function, causing the indicator to go out.

M. WHEEL OSC button and indicator (Modulation Wheel Oscillator)
Use this button to enable the oscillation frequency of the oscillators (OSC-1 & OSC-2) to be controlled by the **M. WHEEL**. Press this button once again to cancel the function, causing the indicator to go out.

WRITE button and indicator
Use this button to memorize the voice data created during EDIT mode onto memory banks A or B. Press the EDIT button to cancel this function during operation.

TAPE button and indicator
This button is used to save (record) the voice data memorized in the respective banks (A, B or PRESET) of the AX80 onto tape, to verify (confirm) the voice data recorded on tape, or to load the recorded voice data into banks A or B of the AX80.
To cancel this function, press the button when the three indicators of the EG/VCA Mode Display begin to flicker, causing the indicators to go out.

A, B buttons and indicators
These buttons are used to memorize the voice data created during the edit mode, or when utilizing the voice data for the memory banks A and B.
It is possible to write new data into these memory banks.

Caution
Voice data has already been memorized onto the respective memory banks A and B. It is advisable to first save these voice data onto tape before memorizing voice data created during the edit mode, since entering new data will cause previous data to be erased.

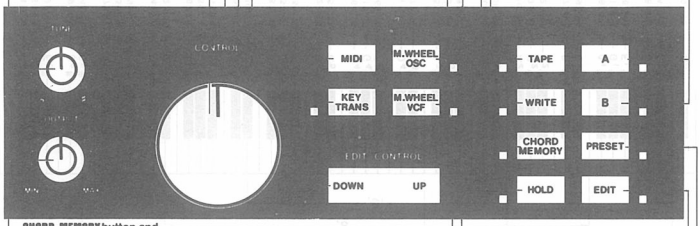

CHORD MEMORY button and indicator
This button is used when memorizing a certain chord, or for single-finger chording, etc., when the use of a memorized chord is required.
To cancel this function, press the **CHORD MEMORY** button (the indicator goes out).

OUTPUT control
Use this control to adjust the output level of the **OUTPUT** jack or the **PHONES** jack.

HOLD button and indicator
Press this button to extend (hold) the note of the key depressed during **CHORD MEMORY** operation.
Press this button once again to cancel the function, causing the indicator to go out.

EDIT button and indicator
This button is used for the application of voice data memorized in the A, B, or PRESET banks for the creation of entirely new voice data.

PRESET button and indicator
This button is used to call out the voice data memorized in the preset bank.
It is not possible to write new data into the PRESET memory bank.

Fig. 3-2

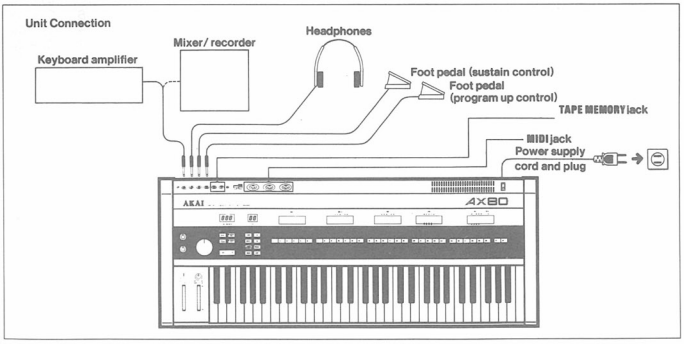

Fig. 3-3

IV. THE KEYBOARD RECATION-SHIP TO EQUALLY TEMPERED SCALE FREQUENCES AND MUSI-CALNOTATION.

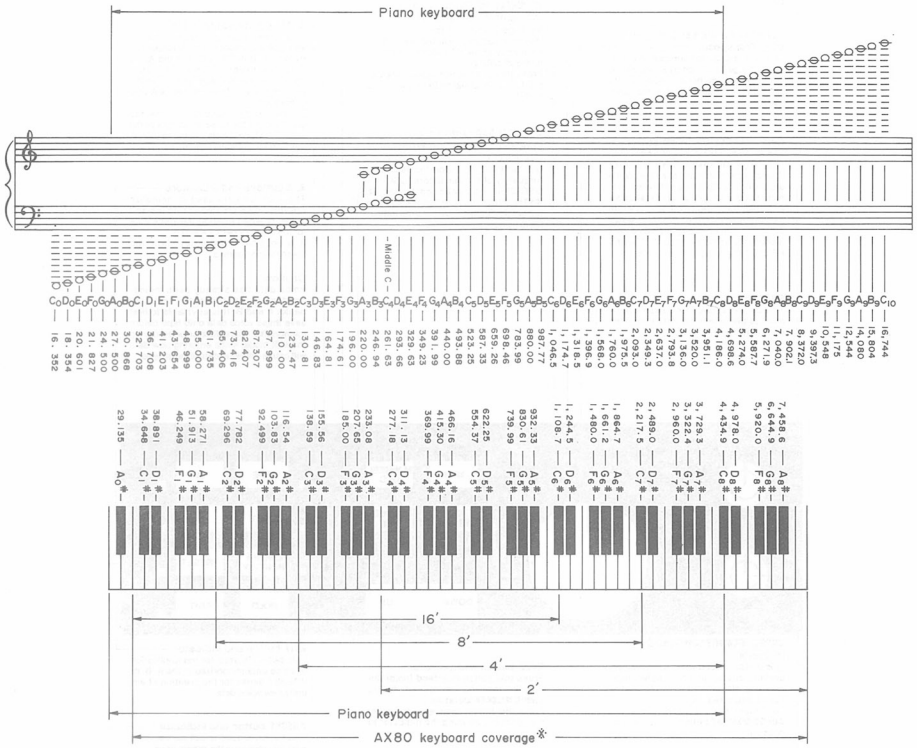

※Keyboard Coverage
by Frequency Range
Setting (E1 or E7)

16′ : $C_1 - C_6$
8′ : $C_2 - C_7$
4′ : $C_3 - C_8$
2′ : $C_4 - C_9$
Piano: $A_0 - A_8$

Fig. 4-1

V. PRINCIPAL PARTS LOCATION

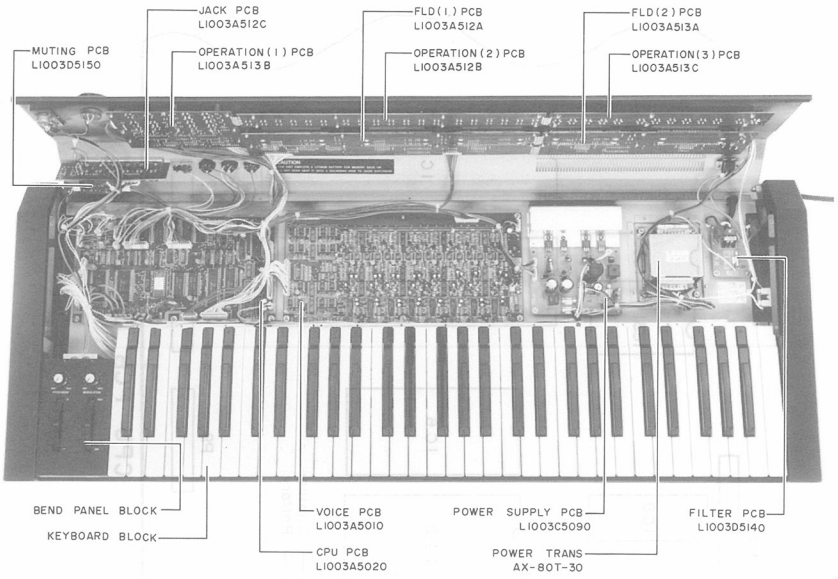

Fig. 5-1

VI. IC VERIONS

1) There are three versions of AX80s by using different types, lot numbers and programs of ICs.
2) These IC combinations must be used for the optimum results.
3) Three combinations.

ROM IC4 (μPD2764 D) in CPU PCB.	Voice IC 106-806 in VOICE PCB (ECM3372)	
Program Versions	Types	Lot Numbers
I	B	8425
I	B	8427
K	C	N/A

4) How to distinguish the differences.

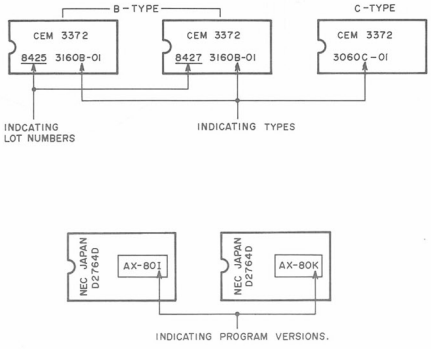

Fig. 6-1

5) Location of the ICs (Refer to Figs. 6-2 & 7-1).

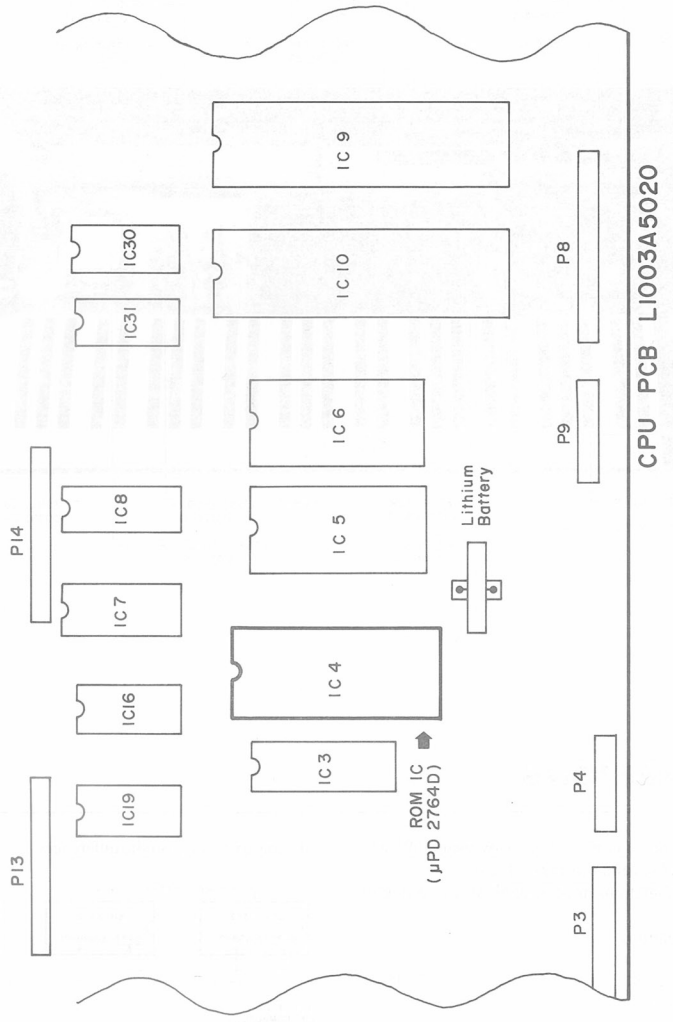

Fig. 6-2

VII. ADJUSTMENT PROCEDURE FOR VOICE PCB

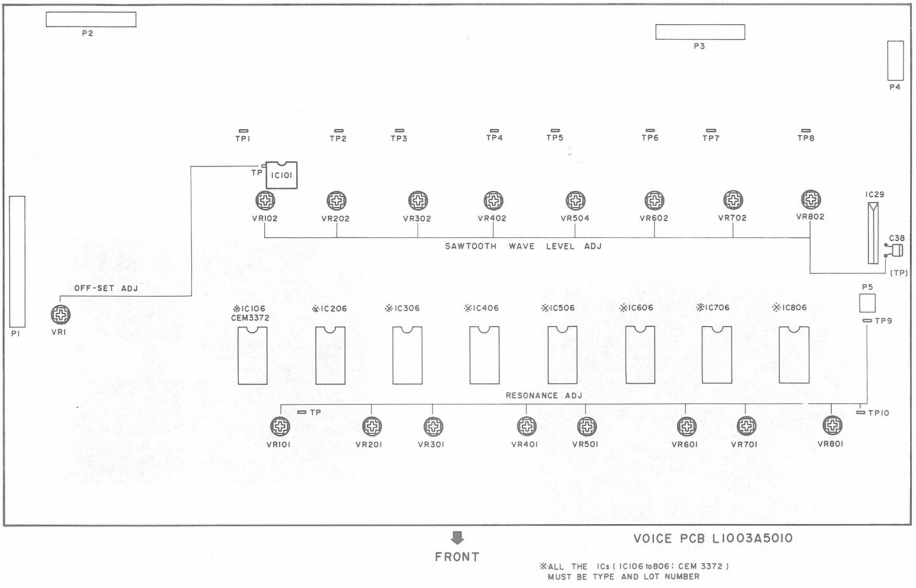

Fig. 7-1

7-1. PREPARATION FOR THE ADJUSTMENT

* It is recommended to save A & B bank data onto a cassett tape, and verify A & B bank data.
* It is requied to warm the unit up for 5 minuits before the adjustment of the resonance frequency for each voice.
* Make sure to load A & B bank data from the cassette tape after repair or/and adjustment was completed.

7-2. OFFSET ADJUSTMENT (ADJUSTMENT OF SAWTOOTH WAVE LEVEL ON DCO-2)

1) Turn on the unit, then the unit will be initialized in the Pl (Preset 1) mode.
2) Set the unit to Edit mode and set the parameters as follows.

Parameter Button	Function	Display Data
6	OSC-1 LEVEL	0
7	FREQ RANGE	16
8	DETUNE	50
9	WAVE	1
10	CROSS MOD	0
11	EG DEPTH	50
13	OSC-2 LEVEL	99
14	CUT OFF FREQ	99
15	RESONANCE	0
16	EG DEPTH	50
17	KEY FOLLOW	0
18	KEY VELOCITY	0
19	HPF	0
24	LFO SELECT	2
33	LFO	0
30	EG SELECT	1
25	ATTACK	0
26	DECAY	0
27	SUSTAIN	99
28	RELEASE	0
31	KEY VELOCITY	0
32	LEVEL	99

3)Turn off the Memory Protect SW.
4) Save the above parameters to one of Memory Bank (e.g. B1) and turn ON the Memory Protect SW.
5) Select any Memory Bank or Preset. Do not touch any keys.
6) Select the Memory Bank again where the above parameters are saved (e.g. B1).
7) Connect the oscilloscope probe to IC101 Pin 1.
8) Set the oscilloscope range so that the waveform can be seen clearly.
9) Press one-octave lower C key (C5) from the highest C key (C6) as the 1st key to press.
10) Check peak-to-peak voltage of the waveform.

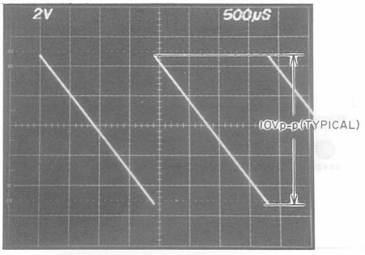

Fig. 7-2 Output waveform when C5 is depressed.

11) Connect the oscilloscope probe to Pin 1 of the following ICs and read peak-to-peak voltages.

	*Key No.	IC No.
2nd key	D5	IC201
3rd key	E5	IC301
4th key	F5	IC401
5th key	G5	IC501
6th key	A5	IC601
7th key	B5	IC701
8th key	C6	IC801

* Key numbers are indicated as the FREQ RANGE at "16" setting (See Fig. 4-1).

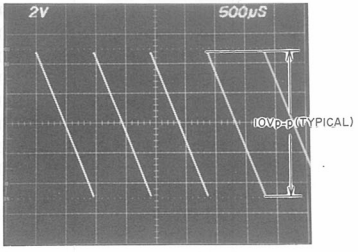

Fig. 7-3 Output waveform when C6 is depressed.

12) Determine the average peak-to-peak voltage (i.e. 10Vp-p) from above readings.
13) Connect the oscilloscope probe to IC101 Pin 1.
14) Press the lowest C key (C1) and read peak-to-peak voltage, then change the connection to IC201 pin 1, press the next higher key (D1) and read Peak to Peak voltage in the same manner as the item 11) above.
15) Find the lowest Peak-to-peak voltage and adjust by turning VR1 to that so that this lowest peak-to-peak voltage on this particular voice will be the same as the average peak-to-peak voltage from the item 12.

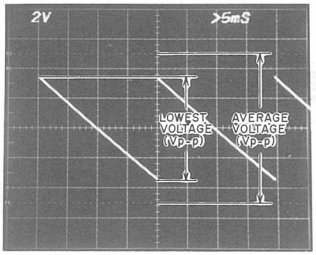

Fig. 7-4 Output waveform of lowest Peak-to-Peak voltage

16) If you can not go back to this voice number, simply switch to the other Memory Bank then back to the same bank as the item 6 (e.g. B1).
17) Press the lowest C key (C1) as the 1st key then next higher key until you get the voice you want.
18) Adjust VR1 as same manner as the item 15.

7-3. ADJUSTMENT OF SAWTOOTH WAVE LEVEL

1) Turn the power off and on again.
   Do not touch any keys on the keyboard.
2) Select the Memory Bank (e.g. Bl) used for the previous adjustment.
3) Set the unit to Edit mode and set the parameters as follows.

Parameter Button	Function	Display Date
1	FREQ RANGE	16
2	WAVE	2
3	PW	0
4	PWM	0
5	SUB OSC	0
6	OSC-1 LEVEL	99
13	OSC-2 LEVEL	0
24	LFO SELECT	1
20	LFO	0

4) Connect the oscilloscope probe to the Test Point C38(TP) and TP-10 (GND).
5) Press the key from C1 to C2 one by one and adjust by turning VR102 to VR802 for required Voice No.(refer to the table below),so that the duty cycle of the square waveform is 50%.

VOICE No.	VR No	*Key No
1	102	C1 (Lowest)
2	202	D1
3	302	E1
4	402	F1
5	502	G1
6	602	A1
7	702	Bl
8	802	C2

* Key numbers are indicated as the FREQ RANGE at "16" setting (See Fig. 4–1)

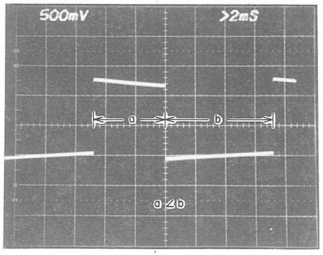

Fig. 7-5 (a)

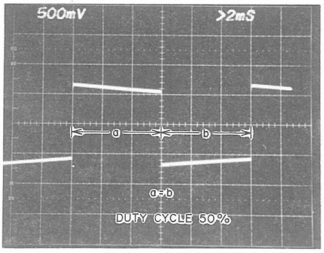

Fig. 7-5 (b)

Square waveform

7-4. RESONANCE FREQUENCY ADJUSTMENT

Please refer to the Item 5-1 prior to this adjustment.

1) Turn the power off and on again to initialize the unit(in the Pl mode). Do not touch any keys on the keyboard.
2) Then set the unit to Edit mode and set the parameters as follows.

Parameter Button	Function	Display Data
6	OSC-1 LEVEL	0
13	OSC-2 LEVEL	0
14	CUT OFF FREQ	50
15	RESONANCE	99
16	EG DEPTH	50
17	KEY FOLLOW	0
18	KEY VELOCITY	0
19	HPF	0
25	ATTACK	0
26	DECAY	0
27	SUSTAIN	99
28	RELEASE	0
29	KEY FOLLOW	0
31	KEY VELOCITY	0
32	LEVEL	99

3) Connect the tuner (e.g. KORG MODEL AT-12) to the output jack with a connection cable (or Connect the frequency counter to TP-9 (HOT) and TP-10 (GND)).
4) Press the lowest key (C2) and adjust by turning VRl0l for Voice 1 to get the reading of A3 # on the tuner (for the frequency counter,reading will be 233Hz).
5) Adjust the other voices in the same manner. Refer to the table below.

*Key No.	VR No.	Reading	Voice No.
D2	201	A3 # or 233Hz	2
E2	301	A3 # or 233Hz	3
F2	401	A3 # or 233Hz	4
G2	501	A3 # or 233Hz	5
A2	601	A3 # or 233Hz	6
B2	701	A3 # or 233Hz	7
C3	801	A3 # or 233Hz	8

* Key number are indicated as the FREQ RANGE "8" setting (See Fig. 4-1)

6) Go back to the lst Vioce (Press the lowest Key:C2) to check drift of the frequency and readjust if nessessory, then check next VOICE No. up to the Voice No.8 as the same manner as the item 5.

7-5. LOADING A + B BANK DATA AND CONFIRMATION.

1) Turn off the Memory protect SW.
2) Load and verify A & B bank data.
3) Turn on the Memory Protect SW.
4) Press all the keys of the keyboard one by one to make sure all the keys are functioning with one of the Preset Sound (e. g. P1)
5) Press one of the key of the keyboard and check all the Preset, A and B Bank Sounds (i.e. P1-P32, A1-A32 and B1-B32) to make sure there will be proper sounding output.

VIII. PC BOARD TITLES & IDENTIFICATION NUMBERS

PC Boaod Title		PC Board Number
VOICE	PC BOARD	L1003A5010
CPU	PC BOARD	L1003A5020
FLD(1)	PC BOARD	L1003A512A
OPERATION(2)	PC BOARD	L1003A512B
JACK	PC BOARD	L1003A512C
FLD(2)	PC BOARD	L1003A513A
OPERATION(1)	PC BOARD	L1003A513B
OPERATION(3)	PC BOARD	L1003A513C
POWER SUPPLY	PC BOARD	L1003C5090
FILTER	PC BOARD	L1003D5140
MUTING	PC BOARD	L1003D5150

A BANK SOUND DATA

for C-Type IC

DATA NO. / BANK	OCS-1						OSC-2						VCF						LFO OSC-1			LFO OSC-2			LFO VCF				VCA, VCA, VCF				EG VCF						VCF		* for B-Type IC
	1	2	3	4	5	6	7	8	9	10	11	12	13	14	15	16	17	18	19	20	21	22	23	33	34	35	36	37	38	39	40	24	25	26	27	28	29	41	42	43	44	45	30	31	32	26	28	32
A1	8	1	99	4	1	99	4/10	51	1	0	49	2	32	48	8	53	90	99	26	1	0	0	4	0	17	0	3	0	0	0	4	1	10	36	0	12	90	14	23	11	99	0	1	99	99	31	9	98
A2	8	3	99	0	1	4	4/0	60	2	0	50	2	57	28	32	69	34	0	33	7	52	0	4	0	90	0	3	0	0	0	4	1	0	12	0	11	18	0	19	65	49	0	1	37	99	11	9	99
A3	8	3	78	0	0	82	8/7	55	2	2	50	1	99	99	22	38	43	0	47	0	0	0	4	0	43	0	2	0	81	0	2	1	17	9	0	9	99	10	57	99	99	0	1	54	99	7	8	99
A4	8	3	99	0	0	82	8/5	44	3	1	40	1	99	99	41	42	99	0	0	0	0	0	4	0	43	0	2	0	81	0	2	1	0	30	0	4	53	0	97	0	0	87	1	54	31	26	3	26
A5	4	2	21	24	0	29	2/0	50	2	0	50	2	99	51	0	68	21	14	23	0	51	0	4	0	90	0	3	0	57	0	4	1	0	55	99	37	0	0	35	9	74	0	1	37	62	55	35	62
A6	8	2	47	0	0	99	8/0	57	2	0	50	2	57	64	6	70	3	38	23	7	52	0	4	0	90	0	3	0	0	0	4	1	0	33	0	19	19	0	24	11	9	0	1	88	79	33	15	79
A7	8	1	0	50	0	99	8/0	60	1	0	50	2	54	43	12	77	13	36	11	0	38	0	4	0	0	0	4	0	0	0	4	1	37	69	72	12	99	41	47	53	9	91	1	72	59	69	10	59
A8	16	3	2	0	0	99	4/0	50	1	1	50	1	45	35	22	74	26	18	13	8	40	9	4	3	21	0	4	0	0	0	1	1	25	63	81	1	50	2	51	99	8	91	1	0	41	63	1	41
A9	8	2	75	12	0	99	4/7	50	1	1	50	1	80	69	14	51	22	29	30	0	28	0	4	0	0	0	4	0	0	0	1	1	33	69	99	8	0	68	99	99	38	87	1	0	45	69	8	45
A10	16	1	80	50	0	99	16/0	50	0	0	50	2	0	55	21	73	23	65	10	0	53	16	4	0	0	0	4	0	68	0	4	1	29	69	72	6	99	17	23	30	3	91	1	28	74	69	4	74
A11	4	1	0	0	0	99	4/0	50	1	0	50	2	99	48	0	64	16	0	0	8	33	18	4	0	0	0	4	0	68	0	4	1	52	69	99	5	0	38	57	90	6	91	1	0	89	69	4	89
A12	16	2	99	0	0	83	16/0	50	0	0	50	2	0	68	34	50	24	0	5	0	42	0	4	0	26	0	4	0	0	0	1	1	22	96	84	0	34	39	56	99	16	91	1	0	99	96	0	99
A13	8	3	80	0	0	99	2/0	50	3	1	57	1	60	43	34	67	18	25	8	4	40	9	4	3	21	0	4	0	0	0	1	1	20	63	61	1	50	7	99	91	12	91	1	0	24	63	1	18
A14	8	2	18	31	0	99	8/0	66	1	0	50	1	51	60	0	50	23	0	0	0	49	0	4	0	0	0	4	0	0	0	1	1	47	71	71	29	0	0	23	11	16	0	1	0	99	71	24	99
A15	16	2	18	6	0	99	16/0	49	1	0	50	1	99	58	17	50	89	0	0	0	41	45	4	32	0	45	4	6	0	0	4	1	47	71	71	21	0	0	29	11	16	0	1	93	47	71	17	47
A16	8	3	99	3	0	99	8/0	52	1	0	50	2	29	92	0	59	15	89	0	5	42	27	4	0	59	52	2	0	0	0	4	1	54	54	54	17	0	0	48	50	99	0	1	37	25	54	15	25
A17	16	2	0	36	1	99	16/8	51	2	1	56	1	99	45	0	72	0	82	0	0	36	0	4	0	36	0	4	0	36	0	4	1	0	76	0	0	0	0	18	0	13	84	1	73	69	76	0	57
A18	16	3	0	3	1	99	16/0	52	0	2	50	2	99	63	32	74	48	99	0	0	52	0	4	0	90	0	3	2	4	0	4	1	16	47	0	0	0	9	17	0	0	0	1	46	55	47	0	49
A19	8	2	0	81	0	67	16/0	99	2	0	48	2	94	26	5	69	53	55	0	0	32	0	4	0	0	0	2	0	0	0	1	1	37	55	0	7	94	14	99	85	30	63	1	47	99	55	5	99
A20	8	2	34	10	0	55	2/0	50	1	0	50	1	99	7	0	78	65	0	15	4	12	0	4	3	17	0	4	0	16	0	4	1	0	55	85	15	0	0	20	0	16	99	1	42	99	55	15	99
A21	16	3	28	5	1	59	8/0	50	3	1	50	2	68	23	0	84	7	0	0	5	7	0	4	3	26	3	4	0	99	18	2	1	14	81	96	56	0	8	95	95	19	91	1	0	32	81	55	30
A22	4	3	46	19	1	47	16/0	60	1	1	50	2	53	54	22	54	76	49	0	2	99	0	4	0	26	0	4	0	99	3	2	1	0	64	15	22	40	3	22	9	1	91	1	22	99	64	18	99
A23	8	2	1	0	0	99	4/7	75	3	0	50	1	24	18	8	80	11	0	25	8	40	9	4	3	21	0	3	0	0	0	1	1	30	87	81	3	51	30	34	97	19	91	1	0	97	87	1	97
A24	8	1	94	99	0	11	2/0	50	2	1	50	1	62	62	7	74	49	63	81	10	41	0	4	14	28	14	4	0	39	0	4	1	5	44	90	16	38	26	55	73	90	0	1	47	99	44	13	99
A25	8	3	11	25	0	99	8/0	75	0	0	50	2	0	37	6	51	66	40	10	19	39	18	4	3	26	0	4	1	60	0	4	1	53	69	37	28	0	14	82	82	57	0	1	0	99	69	25	99
A26	8	3	44	5	0	99	8/0	68	3	0	56	1	51	59	38	51	17	0	43	76	42	0	4	0	0	0	4	0	0	0	1	1	47	71	71	24	0	0	23	11	16	0	1	0	44	71	24	44
A27	8	2	18	31	0	99	8/0	50	1	0	50	1	51	55	38	99	40	0	0	0	0	0	4	0	67	0	4	0	0	0	1	1	47	71	71	29	0	0	93	23	11	16	0	1	0	66	71	24	66
A28	16	1	98	99	1	99	4/8	48	3	1	35	2	94	22	19	73	99	55	0	0	0	0	4	0	0	0	2	0	0	0	2	1	37	8	64	8	94	14	99	85	30	63	1	47	52	8	5	52
A29	8	2	55	4	1	99	16/7	67	1	0	50	2	54	51	99	99	28	1	0	0	52	0	4	0	90	0	3	0	0	0	4	1	10	85	99	7	0	0	96	99	99	0	1	37	34	85	5	33
A30	8	3	55	4	0	99	8/0	68	3	0	50	2	99	59	4	50	31	30	23	0	34	0	4	0	0	0	3	0	42	0	4	1	46	30	99	26	0	0	96	99	99	0	1	37	44	30	24	42
A31	4	3	81	42	1	81	8/0	51	3	0	50	2	0	68	33	50	30	0	99	99	99	0	1	99	99	0	2	20	75	0	3	1	0	66	69	6	81	0	0	81	65	81	1	81	79	66	4	79
A32	8	2	0	67	1	0	16/7	50	2	0	50	1	0	29	99	55	55	96	0	4	33	0	4	30	26	17	4	0	99	18	2	1	0	29	0	14	99	6	16	0	11	99	1	99	54	26	10	53

* VOICE IC ECM3372 HAS TWO TYPES AS B-TYPE AND C-TYPE.
DATA NO. 26, 28 AND 32 ARE DIFFERENT FROM C-TYPE IC.

B BANK SOUND DATA

for C-Type IC

DATA NO. / BANK	OSC-1					OSC-2						VCF						LFO OSC-1			LFO OSC-2			VCF				VCA, VCA, VCF				EG					VCF			* for B-Type IC
	1	2	3	4	5	6	7	8	9	10	11	12	13	14	15	16	17	18	19	20	21	22	23	33	34	35	36	37	38	39	40	24	25	26	27	28	29	41	42	43	44	45	30	31	32	26	28	32
B1	8	3	12	4	0	85	16/6	70	3	1	54	1	18	75	18	49	10	23	10	0	0	0	4	0	0	0	4	1	20	41	4	1	5	47	0	12	50	14	72	11	0	47	1	99	48	47	9	48
B2	16	1	0	0	0	0	4/0	47	2	0	50	1	86	61	6	90	57	40	99	16	0	0	4	0	44	0	4	0	29	0	4	1	0	31	0	27	71	0	0	6	99	48	1	57	95	29	24	95
B3	8	3	0	0	0	20	8/0	58	2	0	50	2	99	67	0	70	15	1	23	7	99	0	4	0	90	0	3	0	39	0	4	1	0	40	43	40	0	0	0	0	9	0	1	37	99	40	36	99
B4	16	1	0	0	0	96	4/0	47	2	0	50	1	86	66	60	72	57	96	4	16	0	0	4	0	44	0	4	0	29	0	4	1	0	32	0	28	71	0	0	6	99	48	1	57	34	29	24	34
B5	4	3	99	0	0	99	2/0	50	1	1	50	1	91	71	55	41	98	60	4	0	40	0	4	0	42	0	4	0	28	0	4	1	0	21	0	24	47	0	0	0	31	25	1	72	47	18	21	47
B6	16	3	47	0	0	7	8/0	57	2	2	50	2	57	61	11	70	15	1	23	7	52	0	4	0	90	0	3	0	41	0	4	1	0	40	8	33	0	0	9	0	1	37	90	40	30	90
B7	8	2	53	7	0	79	2/0	58	2	2	50	1	53	34	33	71	56	18	0	2	99	0	4	0	26	0	4	0	30	3	2	1	0	99	15	14	40	24	37	9	7	91	1	22	58	99	14	58
B8	8	2	20	99	1	99	8/7	45	2	2	50	2	99	35	20	72	21	0	0	0	0	0	3	0	54	99	4	0	31	0	1	1	26	31	90	0	0	31	99	99	0	0	2	0	28	30	0	28
B9	4	3	94	99	0	12	2/0	50	2	0	50	1	99	62	7	74	49	63	81	10	41	0	4	14	28	14	4	0	0	0	1	1	45	44	90	35	0	26	55	73	90	0	1	47	99	44	33	99
B10	8	2	78	0	0	99	4/7	54	2	2	50	1	99	52	32	58	28	29	12	0	28	0	4	0	0	0	4	0	20	0	4	1	47	23	45	5	0	1	83	99	34	87	1	0	87	23	5	87
B11	4	2	31	4	0	99	4/9	45	2	2	48	2	45	0	10	82	32	99	34	8	40	9	4	3	21	0	3	1	33	0	3	1	34	74	99	8	50	34	74	99	8	50	2	0	99	74	8	99
B12	16	0	99	0	0	0	8/11	27	2	0	57	1	99	38	0	59	65	11	64	7	59	11	4	5	60	5	4	0	58	0	4	1	20	69	99	4	22	31	57	90	12	0	1	5	99	69	4	99
B13	8	3	99	0	0	99	16/0	9	0	0	50	1	0	24	26	79	48	27	99	8	40	9	4	3	25	0	4	0	0	0	1	1	21	3	96	8	34	0	0	98	57	91	1	0	37	3	6	37
B14	16	2	55	4	0	90	16/0	67	1	1	50	2	56	61	13	54	15	1	0	0	52	0	4	0	90	0	3	0	0	0	4	1	60	30	99	28	0	0	96	99	99	0	1	37	81	30	24	81
B15	8	2	36	11	1	99	16/0	38	1	0	50	1	99	49	11	50	89	0	0	0	41	45	4	32	0	45	4	0	18	0	4	1	47	71	71	24	0	0	23	11	16	0	1	51	59	71	17	59
B16	16	2	99	0	1	57	16/5	71	1	1	78	1	99	21	24	79	23	25	0	0	52	2	4	0	90	0	3	0	0	1	1	1	0	34	14	8	0	0	68	0	59	0	1	91	91	34	6	92
B17	16	2	69	0	1	45	16/0	50	1	0	50	2	71	42	15	75	43	69	0	0	54	0	4	0	0	0	4	1	58	0	4	1	0	69	17	5	99	0	5	8	2	91	1	28	99	69	3	99
B18	16	1	0	0	1	81	16/0	50	0	0	50	2	0	15	45	86	25	81	0	38	99	81	1	22	4	0	4	0	81	0	2	1	0	99	0	0	0	0	56	0	81	0	1	23	72	99	0	72
B19	16	1	99	0	0	95	16/0	45	1	0	50	2	64	46	38	75	42	50	0	0	52	0	4	0	4	0	3	0	0	0	1	1	0	26	59	22	0	0	55	21	0	0	1	38	99	26	17	99
B20	8	2	28	5	1	56	4/0	50	3	0	50	2	60	2	9	96	11	0	0	0	7	0	4	0	26	3	4	0	99	18	2	1	14	81	96	26	0	7	95	95	80	91	1	0	39	81	22	34
B21	8	2	53	0	0	79	2/0	58	2	0	50	1	53	48	21	54	76	49	0	2	99	0	4	0	26	0	4	0	99	3	2	1	23	99	15	17	40	3	22	9	1	91	1	22	82	99	14	82
B22	8	3	28	5	1	95	4/0	50	3	1	50	2	99	59	0	84	7	0	0	5	7	0	4	4	26	3	4	0	99	18	2	1	14	81	96	21	0	8	95	95	19	91	1	0	20	81	19	20
B23	8	3	28	50	1	56	4/0	50	3	1	50	2	60	2	26	99	7	25	0	0	7	0	4	0	26	3	4	0	99	18	2	1	14	81	96	36	0	7	95	95	46	91	1	0	28	81	36	28
B24	16	2	0	0	0	99	8/7	57	2	2	49	1	99	70	34	40	52	57	0	0	0	0	2	1	37	0	4	2	39	0	4	1	0	99	99	0	0	0	46	0	19	3	1	71	59	99	0	59
B25	8	2	18	31	0	99	8/0	66	1	0	50	1	51	30	38	99	33	0	0	0	0	0	4	0	67	0	4	0	0	0	1	1	47	71	71	27	0	93	23	11	16	0	1	0	43	71	24	43
B26	8	2	36	11	1	99	16/0	38	1	0	50	1	99	50	51	50	89	0	0	0	41	45	4	32	0	45	4	0	18	0	4	1	47	71	71	20	0	0	23	11	16	0	1	51	41	71	17	41
B27	8	0	0	0	1	62	4/8	50	2	2	50	2	99	59	0	45	63	0	0	0	33	0	2	0	26	0	4	1	16	5	2	1	0	47	0	51	0	13	86	55	71	99	1	0	99	47	48	99
B28	4	3	54	99	0	99	4/1	50	1	2	33	1	94	76	22	0	41	55	4	0	0	0	4	0	0	0	2	0	0	0	2	1	13	24	97	23	0	12	14	6	4	14	1	47	52	24	23	52
B29	4	2	59	99	0	99	16/8	65	2	0	50	1	66	61	53	73	99	0	52	26	99	0	3	0	99	46	3	0	99	0	4	1	47	71	71	20	0	25	90	75	84	0	1	93	99	71	17	99
B30	4	2	18	29	0	99	4/0	66	1	0	50	1	51	62	25	50	35	0	0	0	45	0	4	0	0	0	4	0	70	0	4	1	47	71	71	32	0	0	23	11	16	0	1	0	73	71	24	67
B31	4	2	99	99	1	99	16/0	50	3	1	99	2	99	68	17	75	68	99	0	14	50	0	4	99	50	0	3	99	50	0	4	1	0	76	0	22	90	99	72	0	79	0	1	61	46	76	19	46
B32	16	1	0	0	1	99	16/0	50	1	0	50	2	99	86	74	25	71	0	10	4	99	99	1	8	1	0	4	0	81	0	4	1	0	99	0	0	0	0	49	0	81	0	1	23	28	99	0	27

* VOICE IC ECM3372 HAS TWO TYPES AS B-TYPE AND C-TYPE.
DATA NO. 26, 28 AND 32 ARE DIFFERENT FROM C-TYPE IC.

I-ROM SOUND DATA

	OCS-1						OSC-2						VCF						LFO OSC-1				LFO OSC-2				VCF				EG VCA, VCA, VCF				EG VCF				VCF	
DATA NO. BANK	1	2	3	4	5	6	7	8	9	10	11	12	13	14	15	16	17	18	19	20	21	22	23	33	34	35	36	37	38	39	40	24	25	26	27	28	29	41	42	43	44	45	30	31	32
P1	8	1	99	4	1	99	4/10	51	1	0	49	2	32	63	8	57	16	58	11	1	0	0	4	0	17	0	3	0	0	0	4	1	10	49	0	9	50	14	23	11	99	47	1	99	85
P2	8	2	34	10	0	58	2/0	50	1	0	50	1	99	53	10	53	58	87	15	7	12	0	4	0	12	0	4	0	20	0	4	1	3	35	0	10	63	0	4	0	16	0	1	99	99
P3	16	2	99	0	0	99	16/4	71	1	1	78	1	32	50	23	75	23	35	0	0	52	2	4	0	90	0	3	0	0	0	4	1	0	40	0	0	0	0	0	70	0	0	1	91	99
P4	8	3	99	0	1	82	8/7	29	3	1	42	1	99	74	32	60	99	1	0	0	49	0	4	0	43	0	2	0	81	0	2	1	0	25	0	5	53	0	97	0	0	87	1	54	26
P5	4	0	0	0	1	99	2/0	47	2	0	72	1	99	70	6	0	57	0	99	16	0	0	4	0	81	0	2	0	44	0	1	1	1	31	0	23	71	0	0	0	0	48	1	57	77
P6	8	3	24	1	1	99	8/7	57	1	2	50	2	57	65	6	70	3	38	6	7	52	0	4	0	90	0	3	0	24	0	4	1	0	45	0	15	19	0	24	0	9	0	1	88	32
P7	8	3	99	1	0	99	4/7	45	1	1	50	1	35	31	16	77	23	0	0	0	40	9	4	24	9	0	4	11	0	10	4	1	30	66	81	10	50	31	65	97	11	91	1	0	24
P8	8	1	0	50	0	99	8/0	60	1	0	50	2	54	59	12	77	13	34	11	0	99	0	4	24	0	0	4	0	58	0	4	1	37	69	72	10	99	49	47	53	9	91	1	72	62
P9	16	1	0	50	0	99	16/0	60	1	0	50	2	54	48	14	70	23	4	11	0	49	0	4	0	0	0	4	0	58	0	4	1	42	69	72	10	99	49	47	53	9	91	1	72	75
P10	16	1	0	0	0	99	16/0	50	0	0	50	1	0	19	10	85	40	37	0	0	31	9	4	3	26	64	4	0	20	15	4	1	35	83	68	36	34	37	66	55	16	71	1	55	80
P11	4	1	0	0	0	99	4/0	45	1	0	50	1	99	7	4	82	40	50	26	8	42	9	4	3	21	0	3	0	0	0	1	1	38	22	99	8	50	0	4	97	11	91	2	0	40
P12	8	2	0	0	0	99	16/0	50	0	0	50	2	0	26	2	74	42	0	0	13	33	26	4	0	0	0	4	0	0	0	1	1	41	87	80	7	31	35	65	73	9	9	1	28	80
P13	16	3	88	0	0	99	4/0	50	2	1	56	1	52	40	29	69	14	28	8	8	40	9	4	3	21	0	4	0	0	0	1	1	20	63	81	1	50	2	99	94	12	91	1	14	33
P14	8	2	55	4	0	99	8/0	42	1	0	50	2	56	67	10	50	59	1	0	0	52	0	4	0	90	0	3	0	0	0	4	1	51	30	99	24	0	0	96	99	99	0	1	37	60
P15	16	2	55	4	0	90	16/0	67	1	2	50	2	56	68	3	50	15	1	0	0	52	0	4	0	90	0	3	0	0	0	1	1	38	30	99	24	0	0	99	99	99	0	1	37	94
P16	8	3	35	3	0	84	8/0	59	1	0	50	2	62	77	0	59	15	89	0	5	48	27	4	0	59	52	2	0	0	0	4	1	36	54	54	11	0	39	48	50	53	0	1	37	38
P17	16	3	87	3	1	99	16/0	52	0	2	50	2	99	30	17	72	99	99	0	0	52	0	4	0	90	0	3	2	4	0	4	1	16	47	0	0	0	9	31	0	0	0	1	46	31
P18	16	1	99	3	1	99	8/0	52	1	0	50	2	99	36	30	59	65	99	0	0	52	0	4	0	90	0	3	2	4	0	4	1	0	74	26	0	0	0	31	0	0	0	1	0	35
P19	16	1	0	81	1	87	4/2	59	2	1	50	2	94	23	28	69	2	55	0	0	0	0	4	0	0	0	2	0	0	0	2	1	0	35	0	34	0	0	43	22	30	64	1	47	53
P20	16	2	55	7	0	99	4/7	50	2	0	50	2	87	45	17	68	36	0	10	1	33	0	4	3	26	0	4	0	57	0	4	1	17	99	99	3	99	0	0	39	14	0	1	0	35
P21	16	2	55	7	0	99	4/7	50	2	0	50	2	87	59	0	51	63	0	10	1	33	0	4	3	26	0	4	0	57	0	4	1	17	99	99	3	99	0	0	39	14	0	1	0	48
P22	8	2	55	4	1	90	2/0	42	1	0	50	2	56	20	11	74	99	1	0	0	52	0	4	0	90	0	3	0	0	0	4	1	39	8	99	9	99	0	96	99	99	0	1	96	42
P23	8	2	55	4	0	90	2/0	42	1	0	50	2	56	14	11	74	99	1	0	0	52	0	4	0	90	0	3	0	0	0	4	1	39	8	99	10	99	0	96	99	99	0	1	96	77
P24	8	2	55	7	1	99	16/7	50	2	1	50	2	93	44	17	72	70	1	10	0	33	0	4	0	26	0	4	0	41	0	4	1	0	74	69	0	7	0	0	39	14	0	1	0	34
P25	8	1	18	6	1	99	8/0	40	1	0	50	1	99	58	0	96	0	99	0	0	0	0	4	0	0	0	4	6	0	0	4	1	1	71	71	24	0	0	23	11	16	0	2	99	41
P26	16	1	0	0	0	99	16/0	60	1	0	50	2	54	65	0	64	43	0	0	0	99	0	4	0	0	0	4	0	58	0	4	1	0	69	72	10	99	22	7	6	9	91	1	28	52
P27	16	2	55	7	0	64	2/0	50	0	0	0	1	16	38	42	72	44	1	10	4	33	0	2	3	26	0	4	0	99	15	2	1	0	74	69	0	7	0	63	39	16	0	1	0	70
P28	16	1	99	0	0	79	8/0	45	1	0	50	2	53	51	37	80	61	50	0	0	52	0	4	0	4	0	3	35	4	0	4	1	0	30	0	0	0	0	0	21	0	0	1	37	79
P29	8	2	55	4	1	99	16/7	67	1	0	50	2	54	51	99	99	28	1	0	0	52	0	4	0	90	0	3	0	0	0	4	1	10	85	99	5	0	0	96	99	99	0	1	37	35
P30	8	2	52	25	0	99	8/0	75	2	0	50	2	50	40	30	51	66	40	10	0	33	0	1	3	26	0	4	3	50	0	4	1	64	99	99	50	99	37	82	82	57	0	1	0	28
P31	16	3	81	0	0	81	2/0	1	0	0	50	2	0	30	33	50	81	0	99	99	99	0	1	99	99	81	4	29	75	0	4	1	0	66	69	85	81	0	0	81	65	81	1	81	99
P32	16	3	0	0	1	5	16/0	60	3	2	49	2	99	48	27	88	0	0	54	0	99	0	4	0	0	0	4	2	7	0	4	1	0	99	99	99	0	99	99	99	99	2	1	0	54

K-ROM SOUND DATA

	OCS-1					OSC-2						VCF					LFO OSC-1				LFO OSC-2				VCF				EG VCA, VCA, VCF				EG VCF		VCF	
DATA NO. / BANK	1	2	3	4	5	6	7	8	9	10	11	12	13	14	15	16	17	18	19	20	21	22	23	33	34	35	36	37	38	39	40	24	25	26	27	28	29	41	42	43	44	45	30	31	32
P1	8	1	99	4	1	99	4/10	51	1	0	49	2	32	63	8	57	16	58	11	1	0	0	4	0	17	0	3	0	0	0	4	1	10	54	0	11	50	14	23	11	99	47	1	99	85
P2	8	2	34	10	0	58	2/0	50	1	0	50	1	99	53	10	53	58	87	15	7	12	0	4	0	12	0	4	0	20	0	4	1	3	43	0	12	63	0	4	0	16	0	1	99	99
P3	16	2	99	0	0	99	16/4	71	1	1	78	1	32	50	23	75	23	35	0	0	52	2	4	0	90	0	3	0	0	0	4	1	0	44	0	0	0	0	70	0	0	1	91	99
P4	8	3	99	0	1	82	8/7	29	3	1	42	1	99	74	32	80	99	1	0	0	49	0	4	0	43	0	2	0	81	0	2	1	0	27	0	6	53	0	97	0	0	87	1	54	26
P5	4	0	0	0	1	99	2/0	47	2	0	72	1	99	70	6	0	57	0	99	16	0	0	4	0	81	0	2	0	44	0	1	1	1	39	0	25	71	0	0	0	0	48	1	67	77
P6	8	3	24	1	1	99	8/7	57	1	2	50	2	57	65	6	70	3	38	6	7	52	0	4	0	90	0	3	0	24	0	4	1	0	52	0	19	19	0	24	0	9	0	1	88	32
P7	8	3	99	1	0	99	4/7	45	1	1	50	1	35	31	16	77	23	0	0	0	40	9	4	24	9	0	4	11	0	10	4	1	30	66	81	12	50	31	65	97	11	91	1	0	27
P8	8	1	0	50	0	99	8/0	60	1	0	50	2	54	59	12	77	13	34	11	0	99	0	4	24	0	0	4	0	58	0	4	1	37	69	72	12	99	49	47	53	9	91	1	72	62
P9	16	1	0	50	0	99	16/0	60	1	0	50	2	54	48	14	70	23	4	11	0	49	0	4	0	0	0	4	0	58	0	4	1	42	69	72	11	99	49	47	53	9	91	1	72	75
P10	16	1	0	0	0	99	16/0	50	0	0	50	1	0	19	10	85	40	37	0	0	31	9	4	3	26	64	4	0	20	15	4	1	35	83	68	36	34	37	66	55	16	71	1	55	80
P11	4	1	0	0	0	99	4/0	45	1	0	50	1	99	7	4	82	40	50	26	8	42	9	4	3	21	0	3	0	0	0	1	1	38	22	99	8	50	0	4	97	11	91	2	0	40
P12	8	2	0	0	0	99	16/0	50	0	0	50	2	0	26	2	74	42	0	0	13	33	26	4	0	0	0	4	0	0	0	1	1	41	87	80	9	31	35	65	73	9	9	1	28	80
P13	16	3	88	0	0	99	4/0	50	2	1	56	1	52	40	29	69	14	28	8	8	40	9	4	3	21	0	4	0	0	0	1	1	20	63	81	3	50	2	99	94	12	91	1	14	33
P14	8	2	55	4	0	99	8/0	42	1	0	50	2	56	67	10	50	59	1	0	0	52	0	4	0	90	0	3	0	0	0	4	1	51	30	99	30	0	0	96	99	99	0	1	37	60
P15	16	2	55	4	0	90	16/0	67	1	2	50	2	56	68	3	50	15	1	0	0	52	0	4	0	90	0	3	0	0	0	1	1	38	30	99	34	0	0	99	99	99	0	1	37	94
P16	8	3	35	3	0	84	8/0	59	1	0	50	2	62	77	0	59	15	89	0	5	48	27	4	0	59	52	2	0	0	0	4	1	36	54	54	14	0	39	48	50	53	0	1	37	38
P17	16	3	87	3	1	99	16/0	52	0	2	50	2	99	30	17	72	99	99	0	0	52	0	4	0	90	0	3	2	4	0	4	1	16	56	0	0	0	9	31	0	0	0	1	46	39
P18	16	1	99	3	1	99	8/0	52	1	0	50	2	99	36	30	59	65	99	0	0	52	0	4	0	90	0	3	2	4	0	4	1	0	78	26	0	0	0	31	0	0	0	1	0	35
P19	16	1	0	81	1	87	4/2	59	2	1	50	2	94	23	28	69	2	55	0	0	0	0	4	0	0	0	2	0	0	0	2	1	0	37	0	36	0	0	43	22	30	64	1	47	53
P20	16	2	55	7	0	99	4/7	50	2	0	50	2	87	45	17	68	36	0	10	1	33	0	4	3	26	0	4	0	57	0	4	1	17	99	99	4	99	0	0	39	14	0	1	0	35
P21	16	2	55	7	0	99	4/7	50	2	0	50	2	87	59	0	51	63	0	10	1	33	0	4	3	26	0	4	0	57	0	4	1	17	99	99	4	99	0	0	39	14	0	1	0	48
P22	8	2	55	4	1	90	2/0	42	1	0	50	2	56	20	11	74	99	1	0	0	52	0	4	0	90	0	3	0	0	0	4	1	39	8	99	13	99	0	96	99	99	0	1	96	46
P23	8	2	55	4	0	90	2/0	42	1	0	50	2	56	14	11	74	99	1	0	0	52	0	4	0	90	0	3	0	0	0	4	1	39	8	99	14	99	0	96	99	99	0	1	96	77
P24	8	2	55	7	1	99	16/7	50	2	1	50	2	93	44	17	72	70	1	10	0	33	0	4	0	26	0	4	0	41	0	4	1	0	74	69	0	7	0	0	39	14	0	1	0	39
P25	8	1	18	6	1	99	8/0	40	1	0	50	1	99	58	0	96	0	99	0	0	0	0	4	0	0	0	4	6	0	0	4	1	1	71	71	28	0	0	23	11	16	0	2	99	44
P26	16	1	0	0	0	99	16/0	60	1	0	50	2	54	65	0	64	43	0	0	0	99	0	4	0	0	0	4	0	58	0	4	1	0	69	72	14	99	22	7	6	9	91	1	28	52
P27	16	2	55	7	0	64	2/0	50	0	0	0	1	16	38	42	72	44	1	10	4	33	0	2	3	26	0	4	0	99	15	2	1	0	74	69	0	7	0	63	39	16	0	1	0	70
P28	16	1	99	0	0	79	8/0	45	1	0	50	2	53	51	37	80	61	50	0	0	52	0	4	0	4	0	3	35	4	0	4	1	0	33	0	0	0	0	0	21	0	0	1	37	79
P29	8	2	55	4	1	99	16/7	67	1	0	50	2	54	51	99	99	28	1	0	0	52	0	4	0	90	0	3	0	0	0	4	1	10	85	99	7	0	0	96	99	99	0	1	37	39
P30	8	2	52	25	0	99	8/0	75	2	0	50	2	50	40	30	51	66	40	10	0	33	0	1	3	26	0	4	3	50	0	4	1	64	99	99	50	99	37	82	82	57	0	1	0	30
P31	16	3	81	0	0	81	2/0	1	0	0	50	2	0	30	33	50	81	0	99	99	99	0	1	99	99	81	4	29	75	0	4	1	0	66	69	85	81	0	0	81	65	81	1	81	99
P32	16	3	0	0	1	5	16/0	60	3	2	49	2	99	48	27	88	0	0	54	0	99	0	4	0	0	0	4	2	7	0	4	1	0	99	99	99	0	99	99	99	99	2	1	0	58

SECTION 2

PARTS LIST

TABLE OF CONTENTS

RECOMMENDED SPARE PARTS 21
1. PC BOARD BLOCK 22
2. VOICE PC BOARD 22
3. CPU PC BOARD 23
4. FLD (2) PC BOARD 23
5. FLD (1) PC BOARD 23
6. OPERATION (1) PC BOARD 23
7. OPERATION (2) PC BOARD 23
8. OPERATION (3) PC BOARD 23
9. JACK PC BOARD 23
10. POWER SUPPLY PC BOARD 24
11. FILTER PC BOARD 24
12. MUTING PC BOARD 24
13. PANEL BEND BLOCK 25
14. ASSEMBLY BLOCK 27
15. FINAL ASSEMBLY BLOCK 27
INDEX 28

This Manual is FOR INTERNAL USE ONLY and must not be made available to unauthorized personal. No part of this manual may be reproduced in any form without permission from AKAI-ELECTRIC CO., LTD., Tokyo, Japan.

ATTENTION

1. When placing an order for parts, be sure to list the parts no. model no., and description of each part. If any of this information is omitted, there are instances in which parts cannot be shipped or the wrong parts will be delivered.
2. Please be careful not to make a mistake in the parts no. If the parts no. is in error, a part different from the one ordered may be delivered.
3. Because part numbers and part definitions and supply in the Preliminary Parts List may have been the subject of changes, please use this parts list for all future reference.

HOW TO USE THIS PARTS LIST

1. This Parts List shows those parts which are considered necessary for repairs. Other parts, such as resistors and capacitors, are shown in the "Common List for Service Parts" from which these parts should be selected and parts.
2. The Recommended Spare Parts List shows those parts in the Parts List which are considered particularly important for service.
3. Parts not shown in the Parts List and "Common List for Service Parts" will not in principle be supplied.
4. How to read the parts list

a) Mechanism Block

2. HEAD BASE BLOCK

REF. NO.	PART NO.	DESCRIPTION
2-1x	BH-T2023A320A	HEAD BASE BLOCK GX-F66R
2-2	HP-H2206A010A	HEAD R/P PR4-8FU C
2-3	ZS-477876	PAN20×03STL CMT
2-4	ZS-536488	BID20×08STL CMT
2-5	ZG-402895	CS ANGLE ADJUST SPRING

SP (Service Parts) Classification

A small "x" indicates the inability to show that particular part in the Photo or Illustration.

This number corresponds with the individual parts index number in that figure

This number corresponds with the Figure Number

b) P.C Board Block

6. SYS. CON. P C BOARD BLOCK

REF. NO.	PART NO.	DESCRIPTION
6-1	BA-T2034A070A	PC SYS CON BLK GX-F44R
6-IC1	EI-324536	IC HD14049BP
6-IC2	EI-336801	IC MB8841-564M
6-IC3	EI-331661	IC SN7405N
6-IC4	EI-336725	IC M54527P
6-TR1to4	ET-200985	TR 2SC2603 F,G
6-TR5to28	ET-554657	TR 2SA733A P,Q
6-D1	ED-318292	D SILICON H 1S2473T-77 T26
6-D2to4	ED-308952	D GERMA V 1K34A-LR F07
6-D5to10	ED-318292	D SILICON H 1S2473T-77 T26
6-X1	EI-318384	OSC X'TAL NC-18C 3.579545MHZ

SP (Service Parts) Classification

These reference symbols correspond with component symbols in the Schematic Diagrams.

5. The kind of part and its installation position can both be determined by the Part Number. To determine where a part number is listed, utilize the Parts Index at the end of the Parts List. It is necessary first of all to find the Part Number. This can be accomplished by using the Reference Number listed at the right of the part number in the Parts Index.

WARNING

⚠ INDICATES SAFETY CRITICAL COMPONENTS. FOR CONTINUED SAFETY, REPLACE SAFETY CRITICAL COMPONENTS ONLY WITH MANUFACTURE'S RECOMMENDED PARTS

AVERTISSEMENT

⚠ IL INDIQUE LES COMPOSANTS CRITIQUES DE SÉCURITÉ. POUR MAINTENIR LE DEGRÉ DE SÉCURITÉ DE L'APPAREIL, NE REMPLACER QUE DES PIÉCES RECOMMANDEES PAR LE FABRICANT

RECOMMENDED SPARE PARTS LIST

Because, if the parts listed below are on hand, almost any repair can be accomplished, we suggest that you stock these Recommended Spare Parts Items.

REF. NO.		PART NO.	DESCRIPTION
1	N	BT-354247	⚠TRANS POWER AX-80 T-10 [J]
2	N	BT-354246	⚠TRANS POWER AX-80 T-30 [C, A]
3	N	BT-354245	⚠TRANS POWER AX-80 T-70 [U, E, B, S]
4	N	ED-357036	⚠D SILICON DBA20B 100/2.0A
5	N	ED-357038	⚠D SILICON DBB10B 100/1.0A
6		ED-337265	⚠D ZENER H HZ6 C2
7	N	ED-354114	D LED BR-5507S RED
8	N	ED-357037	D SILICON DBA30B 100/3.0A
9		ED-301911	D SILICON H DS448
10		ED-344280	D SILICON H GMA-01-FY2 F05
11		ED-315614	D SILICIN 10D1FA-1 F15 100/1.0A
12		ED-310387	D ZENER H HZ12 B2
13		ED-329058	D ZENER H HZ5 C1
14		ED-306010	D ZENER H HZ6 A2
15		EF-602550	⚠FUSE SEMKO T 1.25A 250V [U, E, B, S]
16		EF-691007	⚠FUSE SEMKO T 3.15A 250V [U, E, B, S]
17		EF-258344	⚠FUSE SEMKO T 800MA 250V [U, E, B, S]
18		EF-306949	⚠FUSE TSC A 250V 1.25A [J]
19		EF-311839	⚠FUSE TSC A 250V 1.60A [J]
20		EF-326639	⚠FUSE TSC A 250V 3.15A [J]
21		EF-309392	⚠FUSE TSC 125V 1.25A [C, A]
22		EF-308847	⚠FUSE TSC 125V 1.60A [C, A]
23		EF-306956	⚠FUSE TSC 125V 2.50A [C, A]
24		EF-323080	⚠FUSE TSC 125V 3.15A [C, A]
25	N	EI-354283	ICBA6110
26	N	EI-354184	IC CEM3372 3160B (B TYPE)
27	N	EI-359630	IC CEM3372 3160C (C TYPE)
28	N	EI-354098	IC HD74LS154P
29	N	EI-355578	IC MM74HC139N
30	N	EI-354162	IC MM74HC32N
31		EI-307644	IC NJM4556D
32		EI-213390	IC NJM4558D
33		EI-336995	IC NJM78L05A
34	N	EI-354175	IC NJM78M05
35	N	EI-355665	IC NJM7815A
36	N	EI-356299	IC NJM79M05A
37	N	EI-355666	IC NJM7915A
38	N	EI-354158	IC SN74LS00N
39		EI-310043	IC SN74LS03N
40	N	EI-354152	IC SN74LS138N
41	N	EI-354159	IC SN74LS14N
42	N	EI-355560	IC SN74LS27N
43	N	EI-355575	IC SN74LS293N
44	N	EI-354153	IC SN74LS373N
45	N	EI-355771	IC SN74LS38N
46	N	EI-353315	IC SN74LS42N
47		EI-304657	IC TC4011BP
48		EI-306727	IC TC4013BP/MC14013B
49		EI-330391	IC TC4050BP
50		EI-302233	IC TC4051BP
51		EI-324255	IC TL082CP
52	N	EI-354099	IC μPA80C
53	N	EI-354197	IC μPC311C
54	N	EI-354145	IC μPD2764D I (I TYPE)
55	N	EI-359631	IC μPD2764 K (K TYPE)
56	N	EI-354147	IC μPD446C-1
57	N	EI-357060	IC μPD7811G-144
58	N	EI-354146	IC μPD8253C-2
59	N	EI-354149	IC μPD8255AC-2
60	N	EI-354232	IC μPD8279C-2
61	N	EI-354123	OSC CE CSA120MT 12.000000MHz
62	N	EI-354168	OSC X'TAL HC-16 6.554800MHz
63	N	EJ-354235	DIN J TCS0815-0101 5P
64	N	EJ-357159	PHONE J 2P HLJ0520-110 W/NUT 6.3
65	N	EJ-353031	PHONE J 3P HLJ0520-010
66	N	EM-354097	IND FL BG-263ZK CHARACTER
67	N	EM-354113	IND LE TLR325
68	N	EM-354112	IND LE TLR353
69	N	EO-354224	COIL LF PLA2021A
70		EQ-348929	REALAY SIG G5A-232P 2TR 12V
71		ER-320528	⚠R FUSE ERD2FC 1/4W 22R0G
72	N	ES-355573	⚠SW SEESAW SDDAB1097A T = 8.5 [C, A]
73	N	ES-354236	⚠SW SEESAW SDDJA1153A [J, U, E, B, S]
74		ES-349070	⚠SW SELECTOR YKS11-0002 02-4 [U, E, B, S]
75	N	ES-357045	SW SLIDE SSSB02685A 2-02-02N
76	N	ES-354115	SW TACT SKHCAC021A
77		ET-347026	⚠TR 2SB507HP E, F
78	N	ET-354167	PHOTO SENSOR PC900
79	N	ET-357061	PHOTO SENSOR TLP531BL
80		ET-491051	TR FET 2SK30A GR
81		ET-322778	TR 2SA608K-NP E, F, G
82		ET-308141	TR 2SC2603 G
83		ET-403413	TR 2SC536NP H
84		EV-307695	R S-FIX H H0651A 3P 0.05W 104
85		EV-336770	R S-FIX H H0651A 3P 0.05W 473
86	N	EV-354255	VR ROTARY 16L10XOV B103
87	N	EV-354254	VR ROTARY 16L10XOW 103 CUSTOM-2
88	N	EV-358043	VR ROTARY 16L10XOX B103 L = 20
89	N	EV-354253	VR ROTARY 16P20×3T A503
90	N	EV-354256	VR ROTARY 24L10×1G B013
91	N	EZ-354169	BATTERY LITHIUM 3V CR2430-T

"NOTE" N: New Part

SYMBOL FOR DESTINATION

[A] : AAL (U.S.A)
[B] : UK (England)
[C] : CSA(Canada)
[E] : CEE (Europe)
[J] : JPN (Japan)
[S] : SAA (Australia)
[U] : U/T (Universal Area)

1. PC BOARD BLOCK

REF. NO.	PART NO.	DESCRIPTION
1-1	BA-L1003A040A	PC VOICE BLK AX80
1-2	BA-L1003A030A	PC CPU BLK AX80[U]
1-3A	BA-L1003A120A	PC PANEL (1) BLK AX80[U, J, E, B, S]
1-3B	BA-L1003A120B	PC PANEL (1) BLK AX80(C, A)
1-4	BA-L1003A130A	PC PANEL (2) BLK AX80
1-5A	BA-L1003A050A	PC POWER BLK AX80[J]
1-5B	BA-L1003A050B	PC POWER BLK AX80[CA]
1-5C	BA-L1003A050C	PC POWER BLK AX80[U, E, B, S]
1-6A	BA-L3001A050A	PC FILTER BLK AX80[J]
1-6B	BA-L3001A050B	PC FILTER BLK AX80[U, E, B, S]
1-6C	BA-L3001A050C	PC FILTER BLK AX80[C,A]
1-7	BA-L1003A140A	PC MUTING BLK AX80

NOTES:

(1) PC PANEL (1) BLK consists of following PC BOARDS.
- FLD (1) PC BOARD
- OPERATION (2) PC BOARD
- JACK PC BOARD

(2) PC PANEL (2) BLK consists of following PC BOARDS.
- FLD (2) PC BOARD
- OPERATION (1) PC BOARD
- OPERATION (3) PC BOARD

2. VOICE PC BOARD

REF. NO.	PART NO.	DESCRIPTION
2-IC1	EI-354152	IC SN74LS138N
2-IC2 to 6	EI-302233	IC TC4051BP
2-IC7	EI-213390	IC NJM4558D
2-IC8 to 27	EI-324255	IC TL082CP
2-IC28	EI-354283	IC BA6110
2-IC101, 102	EI-213390	IC NJM4558D
2-IC103, 104	EI-304657	IC TC4011BP
2-IC105	EI-306727	IC TC 4013BP/MC14013B
2-IC106A	EI-354184	IC CEM3372 3160B (B TYPE)
2-IC106B	EI-359630	IC CEM3372 3160C (C TYPE)
2-IC107, 201, 202	EI-213390	IC NJM4558D
2-IC206A	EI-354184	IC CEM3372 3160B (B TYPE)
2-IC206B	EI-359630	IC CEM3372 3160C (C TYPE)
2-IC301, 302	EI-213390	IC NJM4558D
2-IC303, 304	EI-304657	IC TC4011BP
2-IC305	EI-306727	IC TC4013BP/MC14013B
2-IC306A	EI-354184	IC CEM3372 3160B (B TYPE)
2-IC306B	EI-359630	IC CEM3372 3160C (C TYPE)
2-IC307, 401, 402	EI-213390	IC NJM4558D
2-IC406A	EI-354184	IC CEM3372 3160B (B TYPE)
2-IC406B	EI-359630	IC CEM3372 3160C (C TYPE)
2-IC501, 502	EI-213390	IC NJM4558D
2-IC503, 504	EI-304657	IC TC4011BP
2-IC505	EI-306727	IC TC4013BP/MC14013B
2-IC506A	EI-354184	IC CEM3372 3160B (B TYPE)
2-IC506B	EI-359630	IC CEM3372 3160C (C TYPE)
2-IC507, 601, 602	EI-213390	IC NJM4558D
2-IC606A	EI-354184	IC CEM3372 3160B (B TYPE)
2-IC606B	EI-359630	IC CEM3372 3160C (C TYPE)
2-IC701, 702	EI-213390	IC NJM4558D
2-IC703, 704	EI-304657	IC TC4011BP
2-IC705	EI-306727	IC TC4013BP/MC14013B
2-IC706A	EI-354184	IC CEM3372 3160B (B TYPE)
2-IC706B	EI-359630	IC CEM3372 3160C (C TYPE)
2-IC707, 801, 802	EI-213390	IC NJM4558D
2-IC806A	EI-354184	IC CEM3372 3160B (B TYPE)
2-IC806B	EI-359630	IC CEM3372 3160C (C TYPE)
2-TR1, 101, 102	ET-322778	TR 2SA608K-NP E, F, G
2-TR103, 104	ET-491051	TR FET 2SK30A GR
2-TR201, 202	ET-322778	TR 2SA608K-NP E, F, G
2-TR203	ET-491051	TR FET 2SK30A GR
2-TR204	ET-491051	TR FET 2SK30A GR
2-TR301, 302	ET-322778	TR 2SA608K-NP E, F, G
2-TR303, 304	ET-491051	TR FET 2SK30A GR
2-TR401, 402	ET-322778	TR 2SA608K-NP E, F, G
2-TR403, 404	ET-491051	TR FET 2SK30A GR
2-TR501, 502	ET-322778	TR 2SA608K-NP E, F, G
2-TR503, 504	ET-491051	TR FET 2SK30A GR
2-TR601, 602	ET-322778	TR 2SA608K-NP E, F, G
2-TR603, 604	ET-491051	TR FET 2SK30A GR
2-TR701, 702	ET-322778	TR 2SA608K-NP E, F, G
2-TR703, 704	ET-491051	TR FET 2SK30A GR
2-TR801, 802	ET-322778	TR 2SA608K-NP E, F, G
2-TR803, 804	ET-491051	TR FET 2SK30A GR
2-D1	ED-329058	D ZENER H HZ5 C1
2-D2, 101 to 107	ED-301911	D SILICON H DS448
2-D108, 109	ED-344280	D SILICON H GMA-01-FY2 F05
2-D201 to 207	ED-301911	D SILICON H DS448
2-D208, 209	ED-344280	D SILICON H GMA-01-FY2 F05
2-D301 to 307	ED-301911	D SILICON H DS448
2-D308, 309	ED-344280	D SILICON H GMA-01-FY2 F05
2-D401 to 407	ED-301911	D SILICON H DS448
2-D408, 409	ED-344280	D SILICON H GMA-01-FY2 F05
2-D501 to 507	ED-301911	D SILICON H DS448
2-D508, 509	ED-344280	D SILICON H GMA-01-FY2 F05
2-D601 to 607	ED-301911	D SILICON H DS448
2-D608, 609	ED-344280	D SILICON H GMA-01-FY2 F05
2-D701 to 707	ED-301911	D SILICON H DS448
2-D708, 709	ED-344280	D SILICON H GMA-01-FY2 F05
2-D801 to 807	ED-301911	D SILICON H DS448
2-D808, 809	ED-344280	D SILICON H GMA-01-FY2 F05
2-VR1	EV-336770	R S-FIX H H0651A 3P 0.05W 473
2-VR101	EV-307695	R S-FIX H H0651A 3P 0.05W 104
2-VR102	EV-336770	R S-FIX H H0651A 3P 0.05W 473
2-VR201	EV-307695	R S-FIX H H0651A 3P 0.05W 104
2-VR202	EV-336770	R S-FIX H H0651A 3P 0.05W 473
2-VR301	EV-307695	R S-FIX H H0651A 3P 0.05W 104
2-VR302	EV-336770	R S-FIX H H0651A 3P 0.05W 473
2-VR401	EV-307695	R S-FIX H H0651A 3P 0.05W 104
2-VR402	EV-336770	R S-FIX H H0651A 3P 0.05W 473
2-VR501	EV-307695	R S-FIX H H0651A 3P 0.05W 104
2-VR502	EV-336770	R S-FIX H H0651A 3P 0.05W 473
2-VR601	EV-307695	R S-FIX H H0651A 3P 0.05W 104
2-VR602	EV-336770	R S-FIX H H0651A 3P 0.05W 473
2-VR701	EV-307695	R S-FIX H H0651A 3P 0.05W 104
2-VR702	EV-336770	R S-FIX H H0651A 3P 0.05W 473
2-VR801	EV-307695	R S-FIX H H0651A 3P 0.05W 104
2-VR802	EV-336770	R S-FIX H H0651A 3P 0.05W 473
2-FR1	ER-320528	⚠ R FUSE ERD2FC 1/4W 22ROG
2-R106	ER-337338	R MF H F05 1/6W 6202F
2-R127	ER-353582	R MF H F05 1/6W 3001F
2-R128	ER-353064	R MF H F05 1/6W 1502F
2-R141	ER-343989	R MF H F05 1/6W 1001F
2-R206	ER-337338	R MF H F05 1/6W 6202F
2-R227	ER-353582	R MF H F05 1/6W 3001F
2-R228	ER-353064	R MF H F05 1/6W 1502F
2-R241	ER-343989	R MF H F05 1/6W 1001F
2-R306	ER-337338	R MF H F05 1/6W 6202F
2-R327	ER-353582	R MF H F05 1/6W 3001F
2-R328	ER-353064	R MF H F05 1/6W 1502F
2-R341	ER-343989	R MF H F05 1/6W 1001F
2-R406	ER-337338	R MF H F05 1/6W 6202F
2-R427	ER-353582	R MF H F05 1/6W 3001F
2-R428	ER-353064	R MF H F05 1/6W 1502F
2-R441	ER-343989	R MF H F05 1/6W 1001F
2-R506	ER-337338	R MF H F05 1/6W 6202F
2-R527	ER-353582	R MF H F05 1/6W 3001F
2-R528	ER-353064	R MF H F05 1/6W 1502F
2-R541	ER-343989	R MF H F05 1/6W 1001F
2-R606	ER-337338	R MF H F05 1/6W 6202F
2-R627	ER-353582	R MF H F05 1/6W 3001F
2-R628	ER-353064	R MF H F05 1/6W 1502F
2-R641	ER-343989	R MF H F05 1/6W 1001F

REF. NO.	PART NO.	DESCRIPTION
2-R706	ER-337338	R MF H F05 1/6W 6202F
2-R727	ER-353582	R MF H F05 1/6W 3001F
2-R728	ER-353064	R MF H F05 1/6W 1502F
2-R741	ER-343989	R MF H F05 1/6W 1001F
2-R806	ER-337338	R MF H F05 1/6W 6202F
2-R827	ER-353582	R MF H F05 1/6W 3001F
2-R828	ER-353064	R MF H F05 1/6W 1502F
2-R841	ER-343989	R MF H F05 1/6W 1001F
2-C105	EC-357035	C PP V CQM-92PP 1001G 100DC
2-C122	EC-328563	C EC V F05 SRA 2R2M 50.0DC
2-C205	EC-357035	C PP V CQM-92PP 1001G 100DC
2-C222	EC-328563	C EC V F05 SRA 2R2M 50.0DC
2-C305	EC-357035	C PP V CQM-92PP 1001G 100DC
2-C322	EC-328563	C EC V F05 SRA 2R2M 50.0DC
2-C405	EC-357035	C PP V CQM-92PP 1001G 100DC
2-C422	EC-328563	C EC V F05 SRA 2R2M 50.0DC
2-C505	EC-357035	C PP V CQM-92PP 1001G 100DC
2-C522	EC-328563	C EC V F05 SRA 2R2M 50.0DC
2-C605	EC-357035	C PP V CQM-92PP 1001G 100DC
2-C622	EC-328563	C EC V F05 SRA 2R2M 50.0DC
2-C705	EC-357035	C PP V CQM-92PP 1001G 100DC
2-C722	EC-328563	C EC V F05 SRA 2R2M 50.0DC
2-C805	EC-357035	C PP V CQM-92PP 1001G 100DC
2-C822	EC-328563	C EC V F05 SRA 2R2M 50.0DC
2-S1 to 4	EJ-358467	SOCKET IC S-I2470

3. CPU PC BOARD

REF. NO.	PART NO.	DESCRIPTION
	CPU PC BOARD	
3-IC1, 2	EI-357060	IC μPD7811G-144
3-IC3	EI-354153	IC SN74LS373N
3-IC5, 6	EI-354147	IC μPD446C-1
3-IC7	EI-355578	IC MM74HC139N
3-IC8	EI-354152	IC SN74LS138N
3-IC9, 10	EI-354149	IC μPD8255AC-2
3-IC11	EI-354232	IC μPD8279C-2
3-IC12	EI-354153	IC SN74LS373N
3-IC13 to 15	EI-330391	IC TC4050BP
3-IC16	EI-355575	IC SN74LS293N
3-IC17	EI-354158	IC SN74LS00N
3-IC18, 19	EI-310043	IC SN74LS03N
3-IC20 to 25	EI-354146	IC UPD8253C-2
3-IC26	EI-354162	IC MM74HC32N
3-IC27	EI-354197	IC μPC311C
3-IC29	EI-354158	IC SN74LS00N
3-IC30	EI-355560	IC SN74LS27N
3-IC31	EI-354159	IC SN74LS14N
3-IC32	EI-310045	IC SN74LS08N
3-TR1	ET-403413	TR 2SC536NP H
3-D1 to 9	ED-301911	D SILICON H DS448
3-PH1	ET-354167	PHOTO SENSOR PC900
3-PH2	ET-357061	PHOTO SENSOR TLP531BL
3-X1	EI-354123	OSC CE CSA120MT 12.000000 MHz
3-X2	EI-354168	OSC X'TAL HC-16 6.554800 MHz
3-IB1, 2	EH-355561	COMP R EXB-R88 103K
3-IB3 to 6	EH-355580	COMP R EXB-C44 203J
3-IB7, 8	EH-355579	COMP R EXB-Q88 103J
3-R25	ER-355564	R OMF H S15 FS 1W 911J
3-BT1	EZ-354169	BATTERY LITHIUM 3V CR2430-T
3-1	EJ-349202	SOKET IC 641267-3 P 28P
	ASSEMBLY BLOCK	
3-IC4A	EI-354145	IC UPD2764D I (I TYPE)
3-IC4B	EI-359631	IC UPD2764 K (K TYPE)

4. FLD(2) PC BOARD

REF. NO.	PART NO.	DESCRIPTION
4-IC1	EI-354098	IC HD74LS154P
4-IC2, 3	EI-354099	IC μPA80C
4-D1	ED-306010	D ZENER H HZ6 A2
4-IN1, 2	EM-354097	IND FL BG-263ZK CHARACTER

5. FLD(1) PC BOARD

REF. NO.	PART NO.	DESCRIPTION
5-IC1	EI-354098	IC HD74LS154P
5-IC2 to 6	EI-354099	IC μPA80C
5-IN1 to 3	EM-354097	IND FL BG-263ZK CHARACTER

6. OPERATION(1) PC BOARD

REF. NO.	PART NO.	DESCRIPTION
6-IC1	EI-353315	IC SN74LS42N
6-IC2, 3	EI-355771	IC SN74LS38N
6-TR1 to 7	ET-322778	TR 2SA608K-NP E, F, G
6-D1	EM-354112	IND LE TL R353 CHARACTER
6-D2, 3	EM-354113	IND LE TL R325
6-D4 to 14	ED-354114	D LED BR-5507S RED
6-SW1 to 14	ES-354115	SW TACT SKHCAC021A

7. OPERATION(2) PC BOARD

REF. NO.	PART NO.	DESCRIPTION
7-SW1 to 19	ES-354115	SW TACT SKHCAC021A

8. OPERATION(3) PC BOARD

REF. NO.	PART NO.	DESCRIPTION
8-SW1 to 13	ES-354115	SW TACT SKHCAC021A

9. JACK PC BOARD

REF. NO.	PART NO.	DESCRIPTION
9-IC1	EI-307644	IC NJM4556D
9-L1,2	EO-318635	COIL FIX 1 LAL04SK 2R2K
9-R7,8	ER-306805	R CB H S15 FS RDS 1/2W 101J
9-J1	EJ-357159	PHONE J 2P HLJ0520-110 W/NUT 6.3
9-J2	EJ-353031	PHONE J 3P HLJ0520-010
9-J3 to 6	EJ-357159	PHONE J 2P HLJ0520-110 W/NUT 6.3

10. POWER SUPPLY PC BOARD

REF. NO.	PART NO.	DESCRIPTION
10-IC1	EI-355665	IC NJM7815A
10-IC2	EI-336995	Ic NJM78L05A
10-IC3	EI-355666	IC NJM7915A
10-IC4	EI-356299	IC NJM79M05A
10-IC5	EI-354175	IC NJM78M05
10-TR1	ET-347026	⚠ TR 2SB507HP E, F
10-D1	ED-357036	⚠ D SILICON DBA20B 100/2.0A
10-D2	ED-357037	⚠ D SILICON DBA30B 100/3.0A
10-D3	ED-337625	⚠ D ZENER H HZ6 C2
10-D4	ED-301911	D SILICON H DS448
10-D5	ED-315614	D SILICON 10D1FA-1 F15 100/1.0A
10-D6	ED-357038	⚠ D SILICON DBB10B 100/1.0A
10-R1	Er-338000	⚠ R FUSE ERD2FC S10 1/4W 2200G
10-R3	ER-302241	R CB H S10 FS RDS 1/4W 4R7J
10-C4, 11	EC-323847	C EC V CUT SM 102M 35.0DC
10-C18	EC-347967	C EC V S10 KM 682M 16DC
10-1	EZ-200473	SILICON RUBBER SHEET TC-30
10-2	ZW-632226	INSULATOR WASHER (BUSH M)

11. FILTER PC BOARD

REF. NO.	PART NO.	DESCRIPTION
11-FL1	EO-354224	COIL LF PLA2021A
11-C1	EC-338411	⚠ C CE V FZ 103P 400AC

12. MUTING PC BOARD

REF. NO.	PART NO.	DESCRIPTION
12-TR1	ET-308141	TR 2SC2603 G
12-D1, 2	ED-301911	D SILICON H DS448
12-D3	ED-310387	D ZENER H HZ12 B2
12-L1	EQ-348929	RELAY SIG G5A-232P 2TR 12V

PANEL BEND BLOCK

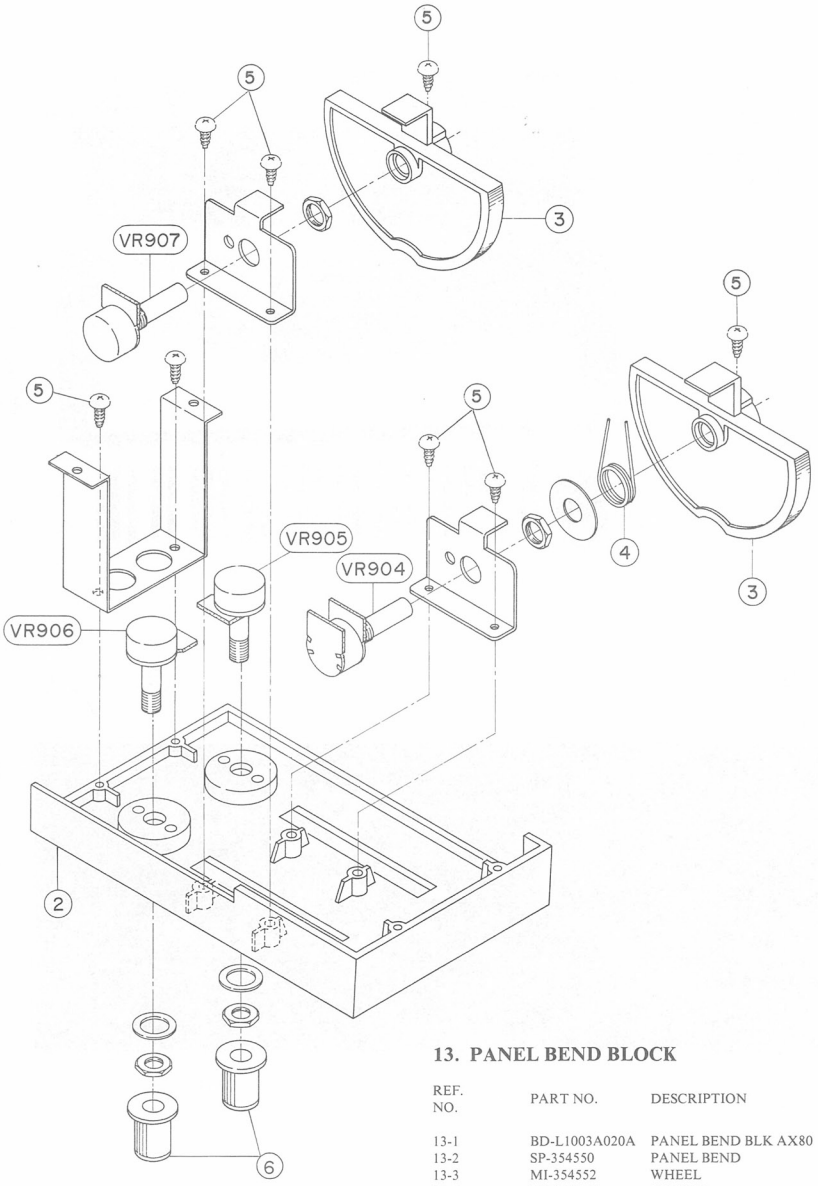

13. PANEL BEND BLOCK

REF. NO.	PART NO.	DESCRIPTION
13-1	BD-L1003A020A	PANEL BEND BLK AX80
13-2	SP-354550	PANEL BEND
13-3	MI-354552	WHEEL
13-4	ZG-354553	SP BEND
13-5	ZS-310984	PT BR30×08STL CMT
13-6	SK-B352952×4	KNOB MONITOR WHITE PART
13-VR904	EV-354253	VR ROTARY 16P20×3T A503
13-VR905, 906	EV-354255	VR ROTARY 16L10×OV B103
13-VR907	EV-354254	VR ROTARY 16L10×OW 103 CUSTOM-2

ASSEMBLY BLOCK

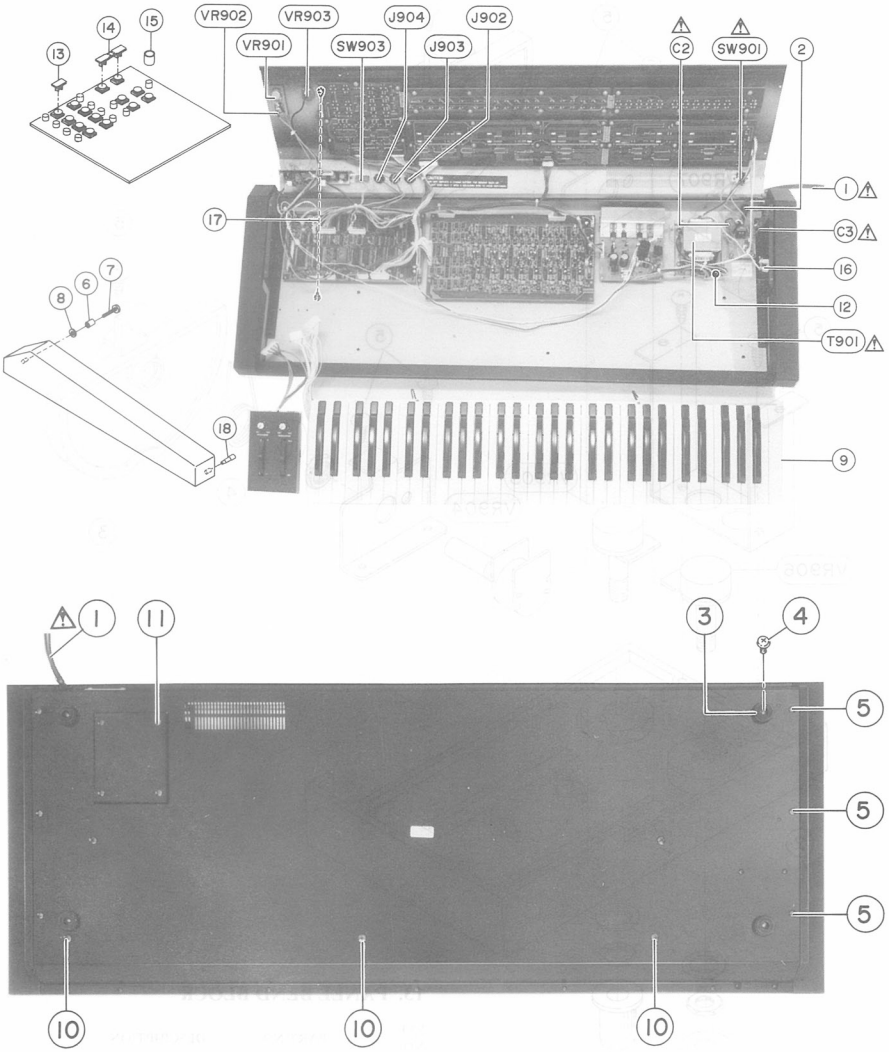

FINAL ASSEMBLY BLOCK

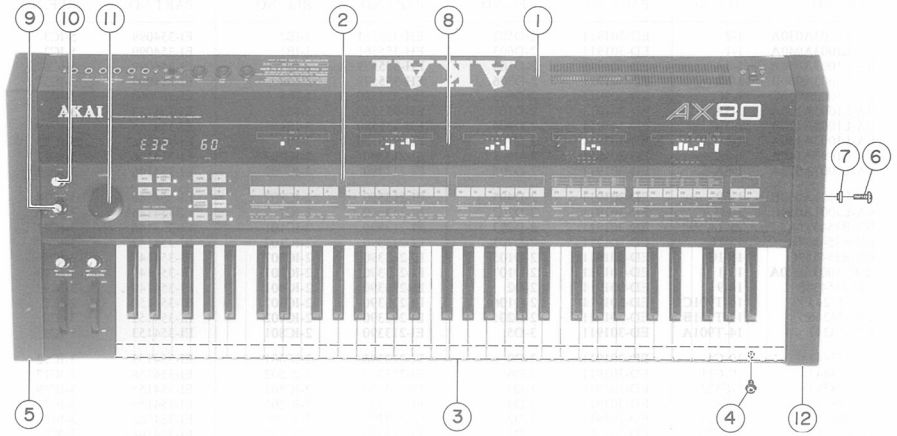

14. ASSEMBLY BLOCK

REF. NO.	PART NO.	DESCRIPTION
14-1A	EW-306427	⚠ AC CORD 2 CORES KP-211, VFF J [J]
14-1B	EW-358858	⚠ AC CORD 2 CORES KP-11 SJTAWG18 UC [C, A]
14-1C	EW-315767	⚠ AC CORD 2 CORES KP-419C/ KS-15 EV [U, E]
14-1D	EW-322400	⚠ AC CORD 2 CORES KS-15/ GTBS-2F B [B]
14-1E	EW-322401	⚠ AC CORD 2 CORES KP-560/KS-15 S [S]
14-2A	EZ-631945	STRAIN RELIEF SR-4N-4 [J]
14-2B	EZ-302906	STRAIN RELIEF SR-6N-4 [C, A]
14-3	SA-311742	ROUND FOOT
14-4	ZS-353260	T2BR30×08STL CMT CUP
14-5	ZS-341960	ST BID40×06STL BNI
14-6	TC-690851	SPACER 4×10
14-7	ZS-355569	T1BID30×20STL CMT
14-8	ZW-357644	PW32×100×050STL BNI
14-9	BK-354243	KEYBOARD BLK ESK-30 61KEY
14-10	ZS-354230	BID50×08STL BNI
14-11	ZS-411232	BID40×10STL BNI
14-12	ZW-413267	N FRANGE 40STL CMT
14-13	SE-357978	KNOB BASE (C)
14-14	SK-354544	KNOB BASE (B)
14-15	MH-314988	SPACER 6×10
14-16	EJ-357148	FUSE HOLDER NPF073-01-010
14-17	MZ-358512	WIRE LEAD EARTH RAG×2
14-18	MH-358770	PROP HOLDER
14-T901A	BT-354247	⚠ TRANS POWER AX-80 T-10 [J]
14-T901B	BT-354246	⚠ TRANS POWER AX-80 T-30 [C, A]
14-T901C	BT-354245	⚠ TRANS POWER AX-80 T-70 [U, E, B, S]
14-C2, 3	EC-358450	⚠ C CE V B 102M 400AC [C, A]
14-VR901, 902	EV-358043	VR ROTARY 16L10XOX B103 L=20
14-VR903	EV-354256	VR ROTARY 24L10×1G B013
14-J901x	EJ-301513	⚠ SOCKET INLET S-I6453 E 2P [U, E, B, S]
14-J902 to 904	EJ-354235	DIN J TCS0815-0101 5P
14-SW901A	ES-354236	⚠ SW SEESAW SDDJA1153A 01-1 (J, U, E, B, S)
14-SW901B	ES-355573	⚠ SW SEESAW SDDAB1097A T=8.5 [C, A]
14-SW902x	ES-349070	⚠ SW SELECTOR YKS11-0002 02-4 (U, E, B, S)
14-SW903	ES-357045	SW SLIDE SSSB02685A 2-02-02N
14-F1A	EF-326639	⚠ FUSE TSC A 250V 3.15A (J)
14-F1B	EF-306956	⚠ FUSE TSC 125V 2.50A (C, A)
14-F1C, F2	EF-602550	⚠ FUSE SEMKO T 1.25A 250V [U, E, B, S]
14-F3A	EF-326639	⚠ FUSE TSC A 250V 3.15A (J)
14-F3B	EF-323080	⚠ FUSE TSC 125V 3.15A [C, A]
14-F3C	EF-691007	⚠ FUSE SEMKO T 3.15A 250V [U, E, B, S]
14-F4A	EF-311839	⚠ FUSE TSC A 250V 1.60A [J]
14-F4B	EF-308847	⚠ FUSE TSC 125V 1.60A [C, A]
14-F4C	EF-258344	⚠ FUSE SEMKO T 800MA 250V [U, E, B, S]
14-F5A	EF-311839	⚠ FUSE TSC A 250V 1.60A [J]
14-F5B	EF-308847	⚠ FUSE TSC 125V 1.60A [C, A]
14-F5C	EF-258344	⚠ FUSE SEMKO T 800MA 250V [U, E, B, S]
14-F6A	EF-306949	⚠ FUSE TSC A 250V 1.25A [J]
14-F6B	EF-309392	⚠ FUSE TSC 125V 1.25A [C, A]
14-F6C	EF-602550	⚠ FUSE SEMKO T 1.25A [U, E, B, S]

15. FINAL ASSEMBLY BLOCK

REF. NO.	PART NO.	DESCRIPTION
15-1A	BD-B354537A	PANEL FRONT AX80[J] PART [J]
15-1B	BD-B354537B	PANEL FRONT AX80 [A, C] PART [C, A]
15-1C	BD-B354537C	PANEL FRONT AX80 [E, V, B, S, U] PART [U, E, B, S]
15-2	SZ-354538	SHEEET MEMBRANE
15-3	SP-354533	PANEL KEYBOARD
15-4	ZS-447761	T2BR30×06STL BNI (PANEL KEYBOARD FIX)
15-5	SP-354535B	SIDE PLATE (L) PAINT
15-6	ZS-342736	ST BID40×20STL BNI
15-7	ZW-535768	PW42×090×050STL BNI
15-8	SE-354539	WINDOW FRONT FLD
15-9	SK-B352952X5	KNOB MONITOR BLUE PART
15-10	SK-B352952X4	KNOB MONITOR WHITE PART
15-11	SK-354540	KNOB DATA
15-12	SP-354549B	SIDE PLATE (R) PAINT

AX80

PART NO.	REF. NO.	PART NO.	REF. NO.	PART NO.	REF. NO.	PART NO.	REF. NO.
BA-L1003A030A	1-2	ED-301911	2-D502	EH-355561	3-IB2	EI-354099	5-IC3
BA-L1003A040A	1-1	ED-301911	2-D603	EH-355561	3-IB1	EI-354099	5-IC2
BA-L1003A050A	1-5A	ED-301911	2-D104	EH-355579	3-IB7	EI-354099	5-IC6
BA-L1003A050B	1-5B	ED-301911	2-D706	EH-355579	3-IB8	EI-354099	5-IC5
BA-L1003A050C	1-5C	ED-301911	2-D805	EH-355580	3-IB5	EI-357060	3-IC2
BA-L1003A120A	1-3A	ED-301911	2-D101	EH-355580	3-IB6	EI-354123	3-X1
BA-L1003A120B	1-3B	ED-301911	2-D404	EH-355580	3-IB4	EI-354145	3-IC4A
BA-L1003A130A	1-4	ED-301911	2-D701	EH-355580	3-IB3	EI-354146	3-IC25
BA-L1003A140A	1-7	ED-301911	2-D601	EI-213390	2-IC707	EI-354146	3-IC22
BA-L3001A050A	1-6A	ED-301911	2-D705	EI-213390	2-IC702	EI-354146	3-IC23
BA-L3001A050B	1-6B	ED-301911	2-D405	EI-213390	2-IC802	EI-354146	3-IC24
BA-L3001A050C	1-6C	ED-301911	2-D202	EI-213390	2-IC7	EI-354146	3-IC20
BD-B354537A	15-1A	ED-301911	2-D203	EI-213390	2-IC101	EI-354146	3-IC21
BD-B354537B	15-1B	ED-301911	2-D703	EI-213390	2-IC102	EI-354147	3-IC6
BD-B354537C	15-1C	ED-301911	2-D105	EI-213390	2-IC507	EI-354147	3-IC5
BD-L1003A020A	13-1	ED-301911	2-D107	EI-213390	2-IC701	EI-354149	3-IC10
BK-B354243	14-9	ED-301911	2-D2	EI-213390	2-IC401	EI-354149	3-IC9
BT-354245	14-T901C	ED-301911	2-D106	EI-213390	2-IC307	EI-354152	2-IC1
BT-354246	14-T901B	ED-301911	2-D201	EI-213390	2-IC402	EI-354152	3-IC8
BT-354247	14-T901A	ED-301911	3-D5	EI-213390	2-IC801	EI-354153	3-IC3
EC-323847	10-C4	ED-301911	3-D9	EI-213390	2-IC601	EI-354153	3-IC12
EC-323847	10-C11	ED-301911	3-D6	EI-213390	2-IC502	EI-354158	3-IC17
EC-328563	2-C822	ED-301911	3-D3	EI-213390	2-IC501	EI-354158	3-IC29
EC-328563	2-C622	ED-301911	3-D4	EI-213390	2-IC201	EI-354159	3-IC31
EC-328563	2-C122	ED-301911	3-D2	EI-213390	2-IC302	EI-354162	3-IC26
EC-328563	2-C522	ED-301911	3-D1	EI-213390	2-IC602	EI-354168	3-X2
EC-328563	2-C322	ED-301911	10-D4	EI-213390	2-IC107	EI-354175	10-IC5
EC-328563	2-C422	ED-301911	12-D2	EI-213390	2-IC202	EI-354184	2-IC806A
EC-328563	2-C222	ED-301911	12-D1	EI-213390	2-IC301	EI-354184	2-IC706A
EC-328563	2-C722	ED-306010	4-D1	EI-302233	2-IC2	EI-354184	2-IC306A
EC-338411	11-C1	ED-310387	12-D3	EI-302233	2-IC6	EI-354184	2-IC406A
EC-347967	10-C18	ED-315614	10-D5	EI-302233	2-IC5	EI-354184	2-IC506A
EC-357035	2-C605	ED-329058	2-D1	EI-302233	2-IC4	EI-354184	2-IC106A
EC-357035	2-C505	ED-337265	10-D3	EI-302233	2-IC3	EI-354184	2-IC606A
EC-357035	2-C405	ED-344280	2-D409	EI-304657	2-IC703	EI-354184	2-IC206A
EC-357035	2-C305	ED-344280	2-D408	EI-304657	2-IC103	EI-354197	3-IC27
EC-357035	2-C705	ED-344280	2-D509	EI-304657	2-IC704	EI-354232	3-IC11
EC-357035	2-C105	ED-344280	2-D708	EI-304657	2-IC304	EI-354283	2-IC28
EC-357035	2-C205	ED-344280	2-D208	EI-304657	2-IC504	EI-355560	3-IC30
EC-357035	2-C805	ED-344280	2-D209	EI-304657	2-IC303	EI-355575	3-IC16
EC-358450	14-C3	ED-344280	2-D608	EI-304657	2-IC104	EI-355578	3-IC7
EC-358450	14-C2	ED-344280	2-D809	EI-304657	2-IC503	EI-355665	10-IC1
ED-301911	2-D301	ED-344280	2-D808	EI-306727	2-IC305	EI-355666	10-IC3
ED-301911	2-D605	ED-344280	2-D508	EI-306727	2-IC705	EI-355771	6-IC3
ED-301911	2-D801	ED-344280	2-D309	EI-306727	2-IC505	EI-355771	6-IC2
ED-301911	2-D403	ED-344280	2-D308	EI-306727	2-IC105	EI-356299	10-IC4
ED-301911	2-D406	ED-344280	2-D609	EI-307644	9-IC1	EI-357060	3-IC1
ED-301911	2-D407	ED-344280	2-D109	EI-310043	3-IC18	EI-359630	2-IC806B
ED-301911	2-D804	ED-344280	2-D709	EI-310043	3-IC19	EI-359630	2-IC506B
ED-301911	2-D807	ED-344280	2-D108	EI-310045	3-IC32	EI-359630	2-IC706B
ED-301911	2-D802	ED-354114	6-D13	EI-324255	2-IC9	EI-359630	2-IC306B
ED-301911	2-D803	ED-354114	6-D8	EI-324255	2-IC20	EI-359630	2-IC406B
ED-301911	2-D604	ED-354114	6-D6	EI-324255	2-IC11	EI-359630	2-IC606B
ED-301911	2-D507	ED-354114	6-D7	EI-324255	2-IC8	EI-359630	2-IC106B
ED-301911	2-D602	ED-354114	6-D4	EI-324255	2-IC10	EI-359630	2-IC206B
ED-301911	2-D704	ED-354114	6-D12	EI-324255	2-IC19	EI-359631	3-IC4B
ED-301911	2-D702	ED-354114	6-D11	EI-324255	2-IC14	EJ-301513	14-J901x
ED-301911	2-D606	ED-354114	6-D10	EI-324255	2-IC13	EJ-349202	3-1
ED-301911	2-D204	ED-354114	6-D5	EI-324255	2-IC12	EJ-353031	9-J2
ED-301911	2-D103	ED-354114	6-D14	EI-324255	2-IC18	EJ-354235	14-J903
ED-301911	2-D102	ED-354114	6-D9	EI-324255	2-IC15	EJ-354235	14-J904
ED-301911	2-D207	ED-357036	10-D1	EI-324255	2-IC17	EJ-354235	14-J902
ED-301911	2-D506	ED-357037	10-D2	EI-324255	2-IC16	EJ-357148	14-16
ED-301911	2-D205	ED-357038	10-D6	EI-324255	2-IC23	EJ-357159	9-J4
ED-301911	2-D206	EF-258344	14-F4C	EI-324255	2-IC22	EJ-357159	9-J3
ED-301911	2-D806	EF-258344	14-F5C	EI-324255	2-IC21	EJ-357159	9-J1
ED-301911	2-D501	EF-306949	14-F6A	EI-324255	2-IC27	EJ-357159	9-J6
ED-301911	2-D302	EF-306956	14-F1B	EI-324255	2-IC26	EJ-357159	9-J5
ED-301911	2-D607	EF-308847	14-F5B	EI-324255	2-IC25	EJ-358467	2-S2
ED-301911	2-D306	EF-308847	14-F4B	EI-324255	2-IC24	EJ-358467	2-S3
ED-301911	2-D305	EF-309392	14-F6B	EI-330391	3-IC14	EJ-358467	2-S4
ED-301911	2-D707	EF-311839	14-F4A	EI-330391	3-IC15	EJ-358467	2-S1
ED-301911	2-D303	EF-311839	14-F5A	EI-330391	3-IC13	EM-354097	4-IN1
ED-301911	2-D304	EF-323080	14-F3B	EI-336995	10-IC2	EM-354097	4-IN2
ED-301911	2-D504	EF-326639	14-F1A	EI-353315	6-IC1	EM-354097	5-IN3
ED-301911	2-D307	EF-326639	14-F3A	EI-354098	4-IC1	EM-354097	5-IN2
ED-301911	2-D503	EF-602550	14-F6C	EI-354098	5-IC1	EM-354097	5-IN1
ED-301911	2-D505	EF-602550	14-F1C	EI-354099	4-IC3	EM-354112	6-D1
ED-301911	2-D401	EF-602550	14-F2	EI-354099	4-IC2	EM-354113	6-D2
ED-301911	2-D402	EF-691007	14-F3C	EI-354099	5-IC4	EM-354113	6-D3

INDEX

PART NO.	REF. NO.	PART NO.	REF. NO.	PART NO.	REF. NO.	PART NO.	REF. NO.
EO-318635	9-L1	ES-354115	8-SW8	EV-358043	14-VR902		
EO-318635	9-L2	ES-354115	8-SW1	EW-306427	14-1A		
EO-354224	11-FL1	ES-354115	8-SW9	EW-315767	14-1C		
EQ-348929	12-L1	ES-354115	8-SW13	EW-322400	14-1D		
ER-302241	10-R3	ES-354115	8-SW6	EW-322401	14-1E		
ER-306805	9-R7	ES-354115	8-SW10	EW-358858	14-1B		
ER-306805	9-R8	ES-354115	8-SW7	EZ-200473	10-1		
ER-320528	2-FR1	ES-354115	8-SW3	EZ-302906	14-2B		
ER-337338	2-R606	ES-354115	8-SW2	EZ-354169	3-BT1		
ER-337338	2-R106	ES-354236	14-SW901A	EZ-631945	14-2A		
ER-337338	2-R306	ES-355573	14-SW901B	MH-314988	14-15		
ER-337338	2-R506	ES-357045	14-SW903	MH-358770	14-18		
ER-337338	2-R706	ET-308141	12-TR1	MI-354552	13-3		
ER-337338	2-R406	ET-332778	2-TR601	MZ-358512	14-17		
ER-337338	2-R806	ET-332778	2-TR702	SA-311742	14-3		
ER-337338	2-R206	ET-332778	2-TR501	SE-354539	15-8		
ER-338000	10-R1	ET-332778	2-TR102	SE-357978	14-13		
ER-343989	2-R841	ET-332778	2-TR602	SK-B352952X4	13-6		
ER-343989	2-R541	ET-332778	2-TR1	SK-B352952X4	15-10		
ER-343989	2-R441	ET-332778	2-TR401	SK-B352952X5	15-9		
ER-343989	2-R341	ET-332778	2-TR201	SK-354540	15-11		
ER-343989	2-R741	ET-332778	2-TR701	SK-354544	14-14		
ER-343989	2-R141	ET-332778	2-TR801	SP-354533	15-3		
ER-343989	2-R241	ET-332778	2-TR402	SP-354533B	15-5		
ER-343989	2-R641	ET-332778	2-TR101	SP-354549B	15-12		
ER-353064	2-R328	ET-332778	2-TR301	SP-354550	13-2		
ER-353064	2-R828	ET-332778	2-TR202	SZ-354538	15-2		
ER-353064	2-R428	ET-332778	2-TR802	TC-690851	14-6		
ER-353064	2-R728	ET-332778	2-TR302	ZG-354553	13-4		
ER-353064	2-R128	ET-332778	2-TR502	ZS-310984	13-5		
ER-353064	2-R628	ET-332778	6-TR7	ZS-341960	14-5		
ER-353064	2-R528	ET-332778	6-TR4	ZS-342736	15-6		
ER-353064	2-R228	ET-332778	6-TR5	ZS-353260	14-4		
ER-353582	2-R527	ET-332778	6-TR6	ZS-354230	14-10		
ER-353582	2-R327	ET-332778	6-TR3	ZS-355569	14-7		
ER-353582	2-R227	ET-332778	6-TR1	ZS-411232	14-11		
ER-353582	2-R727	ET-332778	6-TR2	ZS-447761	15-4		
ER-353582	2-R827	ET-347026	10-TR1	ZW-357644	14-8		
ER-353582	2-R127	ET-354167	3-PH1	ZW-413267	14-12		
ER-353582	2-R627	ET-357061	3-PH2	ZW-535768	15-7		
ER-353582	2-R427	ET-403413	3-TR1	ZW-632226	10-2		
ER-355564	3-R25	ET-491051	2-TR704				
ES-349070	14-SX902x	ET-491051	2-TR403				
ES-354115	6-SW10	ET-491051	2-TR703				
ES-354115	6-SW3	ET-491051	2-TR304				
ES-354115	6-SW2	ET-491051	2-TR504				
ES-354115	6-SW5	ET-491051	2-TR603				
ES-354115	6-SW7	ET-491051	2-TR303				
ES-354115	6-SW6	ET-491051	2-TR103				
ES-354115	6-SW12	ET-491051	2-TR203				
ES-354115	6-SW11	ET-491051	2-TR204				
ES-354115	6-SW4	ET-491051	2-TR604				
ES-354115	6-SW1	ET-491051	2-TR104				
ES-354115	6-SW9	ET-491051	2-TR404				
ES-354115	6-SW8	ET-491051	2-TR503				
ES-354115	6-SW14	ET-491051	2-TR803				
ES-354115	6-SW13	ET-491051	2-TR804				
ES-354115	7-SW18	EV-307695	2-VR201				
ES-354115	7-SW4	EV-307695	2-VR401				
ES-354115	7-SW19	EV-307695	2-VR501				
ES-354115	7-SW17	EV-307695	2-VR601				
ES-354115	7-SW15	EV-307695	2-VR801				
ES-354115	7-SW12	EV-307695	2-VR301				
ES-354115	7-SW16	EV-307695	2-VR101				
ES-354115	7-SW3	EV-307695	2-VR701				
ES-354115	7-SW2	EV-336770	2-VR202				
ES-354115	7-SW13	EV-336770	2-VR102				
ES-354115	7-SW1	EV-336770	2-VR302				
ES-354115	7-SW6	EV-336770	2-VR502				
ES-354115	7-SW5	EV-336770	2-VR1				
ES-354115	7-SW11	EV-336770	2-VR402				
ES-354115	7-SW10	EV-336770	2-VR802				
ES-354115	7-SW9	EV-336770	2-VR702				
ES-354115	7-SW8	EV-336770	2-VR602				
ES-354115	7-SW7	EV-354253	13-VR904				
ES-354115	7-SW14	EV-354254	13-VR907				
ES-354115	8-SW4	EV-354255	13-VR906				
ES-354115	8-SW5	EV-354255	13-VR905				
ES-354115	8-SW12	EV-354256	14-VR903				
ES-354115	8-SW11	EV-358043	14-VR901				

AKAI

MODEL AX80

SECTION 3

SCHEMATIC DIAGRAM AND PC BOARDS

TABLE OF CONTENTS

1. CPU BLOCK DIAGRAM 2
2. VOICE BLOCK DIAGRAM 3
3. CONNECTION DIAGRAM 4
4. OPERATION PC BOARD 5
5. POWER SUPPLY SCHEMATIC DIAGRAM 6
6. POWER SUPPLY PC BOARD 7
7. FLD (1) (2) SCHEMATIC DIAGRAM 8
8. FLD (1) (2) PC BOARD 9
9. OPERATION (1) SCHEMATIC DIAGRAM 10
10. OPERATION (1) PC BOARD 11
11. CPU SCHEMATIC DIAGRAM 12
12. CPU PC BOARD 13
13. VOICE SCHEMATIC DIAGRAM 14
14. VOICE PC BOARD 15

0092

This Manual is FOR INTERNAL USE ONLY and must not be made available to unauthorized personal. No part of this manual may be re-produced in any form without permission from AKAI-ELECTRIC CO., LTD., Tokyo, Japan.

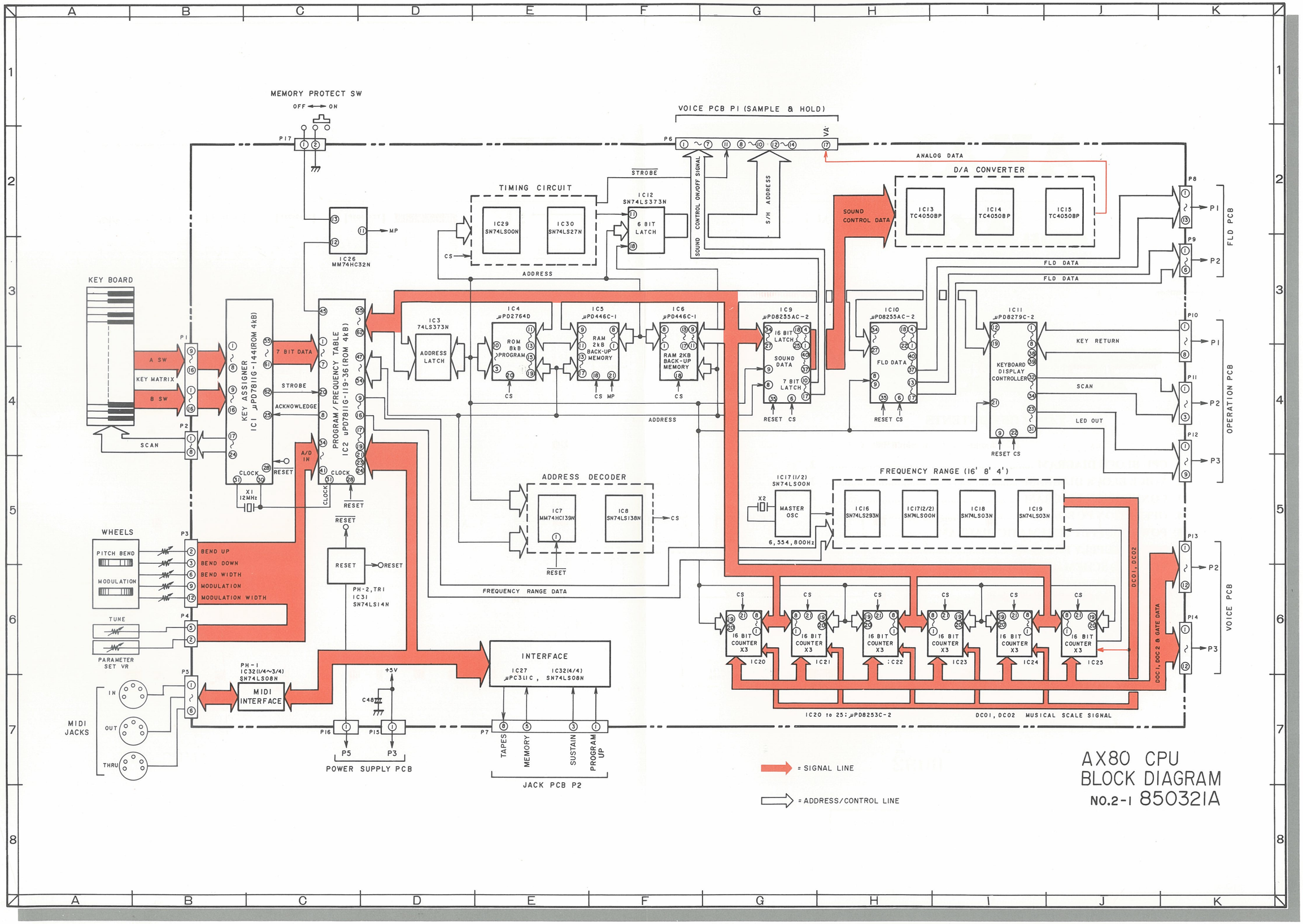
MEMORY PROTECT SW
OFF ON
P17
VOICE PCB P1 (SAMPLE & HOLD)
P6
ANALOG DATA
D/A CONVERTER
IC13 TC4050BP
IC14 TC4050BP
IC15 TC4050BP
SOUND CONTROL DATA
SOUND CONTROL ON/OFF SIGNAL
S/H ADDRESS
STROBE
TIMING CIRCUIT
IC29 SN74LS00N
IC30 SN74LS27N
IC12 SN74LS373N
6 BIT LATCH
IC26 MM74HC32N
MP
CS
ADDRESS
KEY BOARD
A SW
B SW
KEY MATRIX
SCAN
P1
P2
KEY ASSIGNER
IC1 μPD7811G-144(ROM 4kB)
7 BIT DATA
STROBE
ACKNOWLEDGE
A/D IN
PROGRAM / FREQUENCY TABLE
IC2 μPD7811G-119-36(ROM 4kB)
CLOCK
RESET
X1
12MHz
IC3 74LS373N
ADDRESS LATCH
IC4 μPD2764D
ROM 8kB PROGRAM
IC5 μPD446C-1
RAM 2kB BACK-UP MEMORY
IC6 μPD446C-1
RAM 2kB BACK-UP MEMORY
IC9 μPD8255AC-2
16 BIT LATCH
SOUND DATA
7 BIT LATCH
RESET CS
IC10 μPD8255AC-2
FLD DATA
IC11 μPD8279C-2
KEYBOARD DISPLAY CONTROLLER
KEY RETURN
SCAN
LED OUT
FLD DATA
FLD DATA
P8
P9
P1
P2
FLD PCB
P10
P11
P12
P13
P14
P1
P2
P3
OPERATION PCB
VOICE PCB
ADDRESS DECODER
IC7 MM74HC139N
IC8 SN74LS138N
RESET
FREQUENCY RANGE DATA
FREQUENCY RANGE (16' 8' 4')
IC17(1/2) SN74LS00N
X2
MASTER OSC
6,554,800Hz
IC16 SN74LS293N
IC17(2/2) SN74LS00N
IC18 SN74LS03N
IC19 SN74LS03N
WHEELS
PITCH BEND
MODULATION
BEND UP
BEND DOWN
BEND WIDTH
MODULATION
MODULATION WIDTH
P3
TUNE
PARAMETER SET VR
P4
P5
PH-2,TRI
IC31
SN74LS14N
PH-1
IC32(1/4~3/4)
SN74LS08N
MIDI INTERFACE
MIDI JACKS
IN
OUT
THRU
+5V
C48
P16
P15
P5
P3
POWER SUPPLY PCB
INTERFACE
IC27 μPC311C ,
IC32(4/4) SN74LS08N
P7
TAPES
MEMORY
SUSTAIN
PROGRAM UP
JACK PCB P2
16 BIT COUNTER X3
IC20
IC21
IC22
IC23
IC24
IC25
DC01, DC02
DOC1, DOC2 & GATE DATA
IC20 to 25: μPD8253C-2
DC01, DC02 MUSICAL SCALE SIGNAL
= SIGNAL LINE
= ADDRESS/CONTROL LINE
AX80 CPU
BLOCK DIAGRAM
NO.2-1 850321A

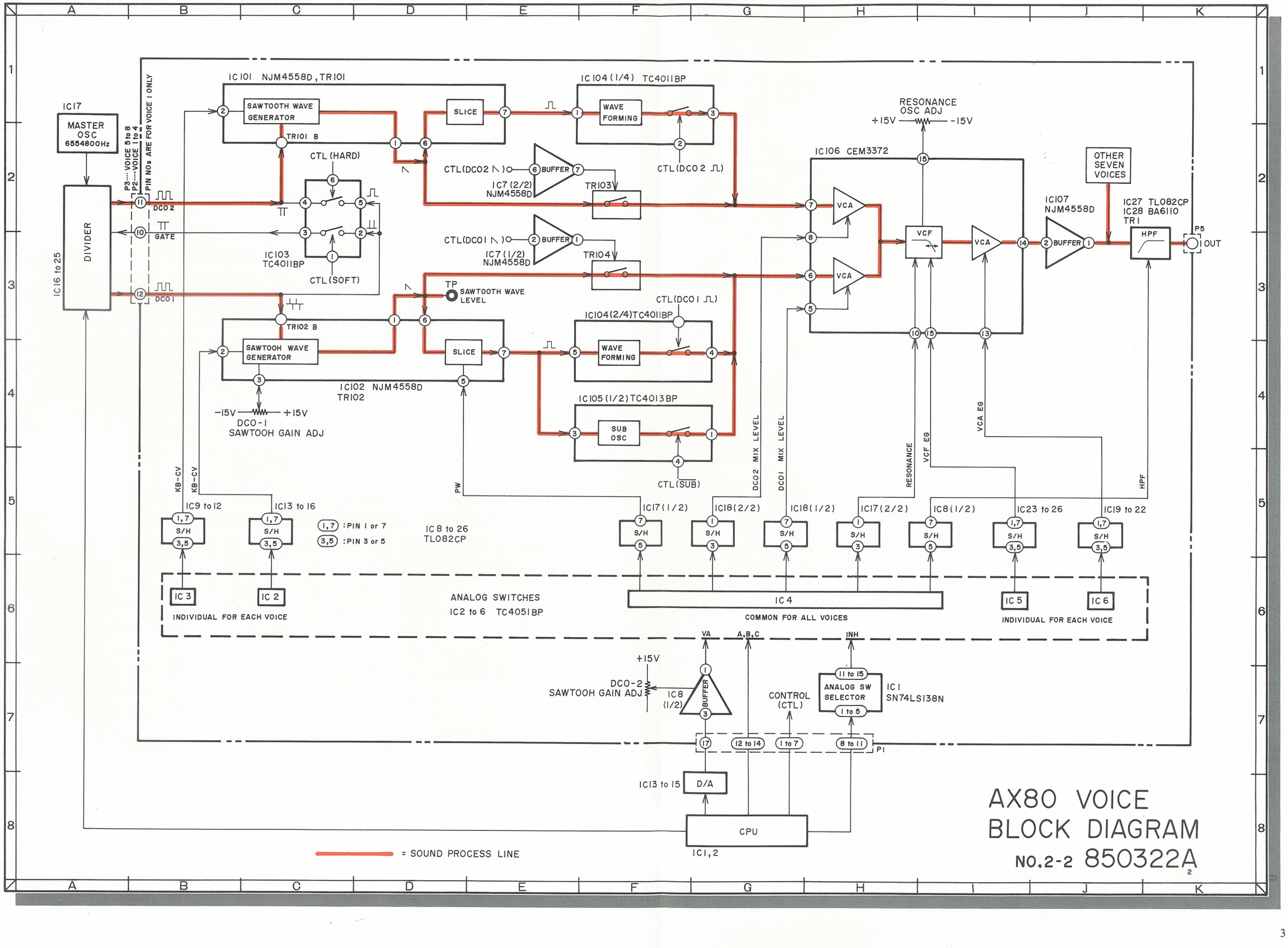

AX80 VOICE BLOCK DIAGRAM

NO.2-2 850322A$_2$

FLD(1) PCB L1003A512A

FLD(2) PCB L1003A513A

FILTER PCB L1003D5140

FILTER PCB L1003D5140

POWER SUPPLY PCB L1003C5090

VOICE PCB L1003A5010

JACK PCB L1003A512C

MUTING PCB L1003D5150

CPU PCB L1003A5020

OPERATION(1) PCB L1003A513B

OPERATION(2) PCB L1003A512B

OPERATION(3) PCB L1003A513C

KEYBOARD

MIDI

NOTE
UNLESS OTHERWISE SPECIFIED
ALL RESISTORS IN OHMS 1/4W(J)
ALL CAPACITORS IN μF 50WV(J)
POWER TRANSFORMER IS DIFFERENT ACCORDING TO AREA

WARNING ⚠INDICATES SAFETY CRITICAL COMPONENTS FOR CONTINUED SAFETY. REPLACE SAFETY CRITICAL COMPONENTS ONLY WITH MANUFACTURER'S RECOMMENDED PARTS

AVERTISSEMENT: ⚠IL INDIQUE LES COMPOSANTS CRITIQUES DE SÉCURITÉ. POUR MAINTENIR LE DEGRÉ DE SÉCURITÉ DE L'APPAREIL, NE REMPLACER QUE DES PIÈCES RECOMMANDÉES PAR LE FABRICANT

AX80 CONNECTION DIAGRAM NO.6-1 850309A2

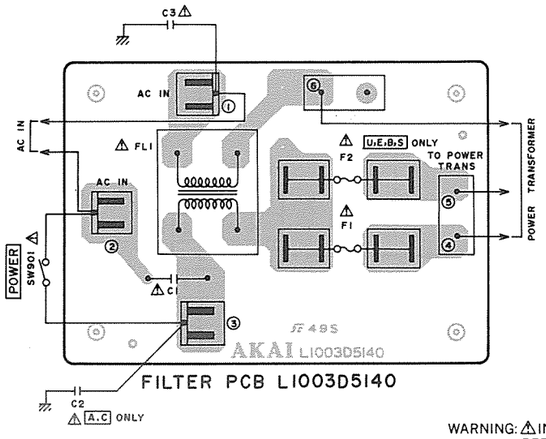

FILTER PCB L1003D5140

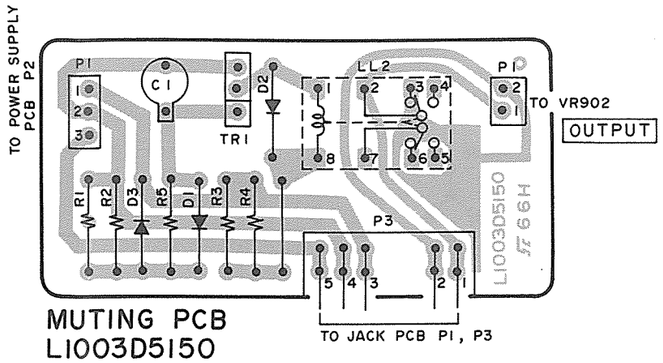

MUTING PCB
L1003D5150

WARNING: ⚠ INDICATES SAFETY CRITICAL COMPONENTS FOR CONTINUED SAFETY, REPLACE SAFETY CRITICAL COMPONENTS ONLY WITH MANUFACTURER'S RECOMMENDED PARTS

AVERTISSEMENT: ⚠ IL INDIQUE LES COMPOSANTS CRITIQUES DE SÉCURITÉ. POUR MAINTENIR LE DEGRÉ DE SÉCURITÉ DE L'APPAREIL, NE REMPLACER QUE DES PIÈCES RECOMMANDEES PAR LE FABRICANT

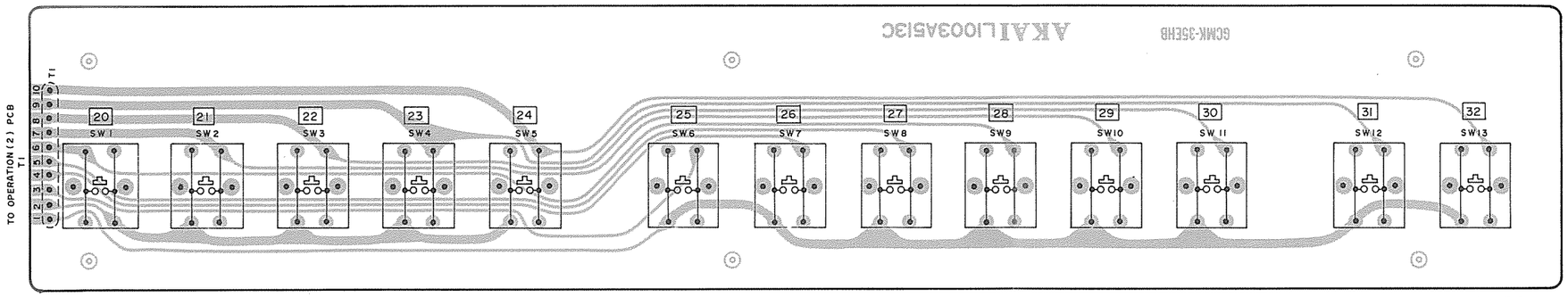

OPERATION (3) PCB L1003A513C

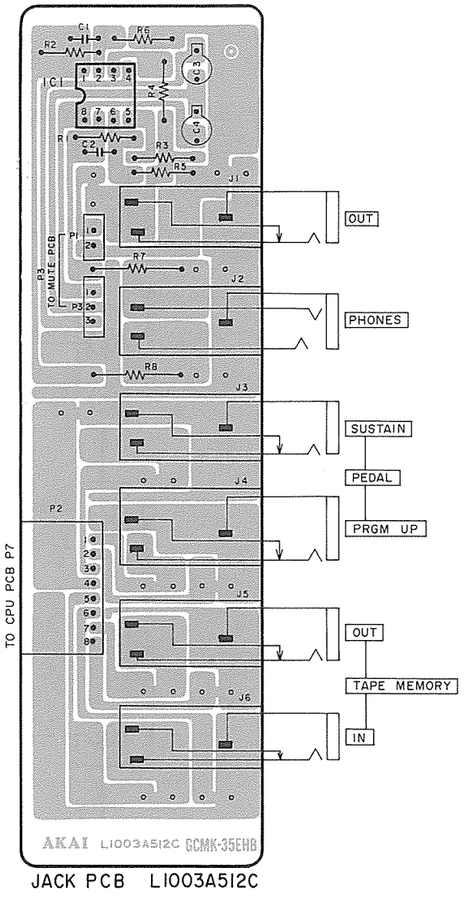

JACK PCB L1003A512C

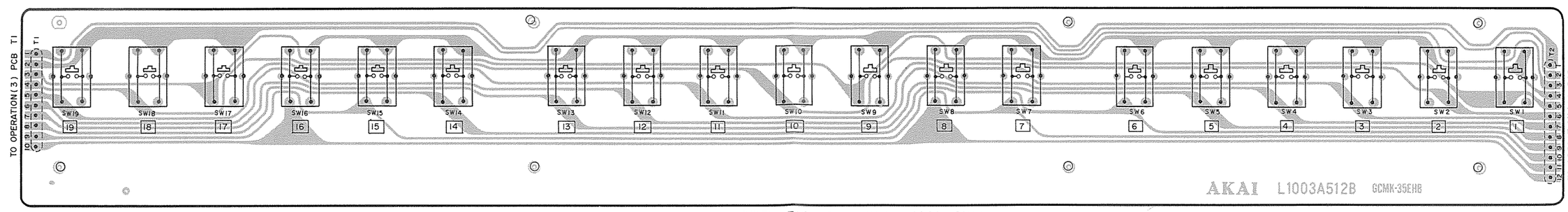

OPERATION (2) PCB L1003A512B

AX80

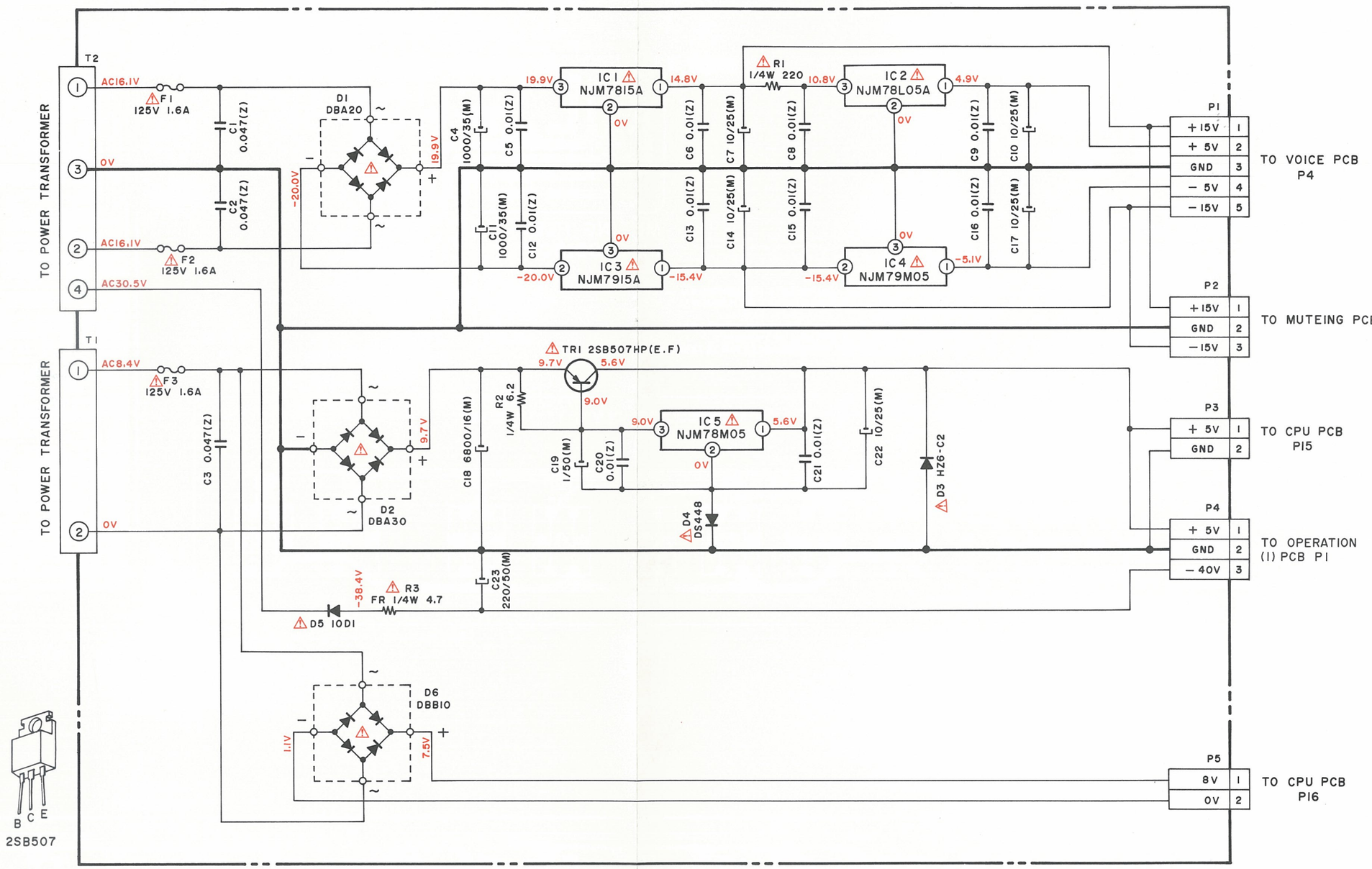

POWER SUPPLY PCB L1003C5090

NOTE
UNLESS OTHERWISE SPECIFIED
ALL CAPACITORS IN μF 50WV(J)

WARNING: ⚠ INDICATES SAFETY CRITICAL COMPONENTS FOR CONTINUED SAFETY, REPLACE SAFETY CRITICAL COMPONENTS ONLY WITH MANUFACTURER'S RECOMMENDED PARTS

AVERTISSEMENT: ⚠ IL INDIQUE LES COMPOSANTS CRITIQUES DE SÉCURITÉ. POUR MAINTENIR LE DEGRÉ DE SÉCURITÉ DE L'APPAREIL, NE REMPLACER QUE DES PIÈCES RECOMMANDEES PAR LE FABRICANT

VOLTAGE MEASURMENT CONDITION WAS IN THE P1 PROGRAM WITH NO KEY FUNCTIONS (NO FUNCTION CHANGE AFTER THE POWER SW IS "ON")

AX80 POWER SUPPLY SCHEMATIC DIAGRAM

NO.6-2 850310A

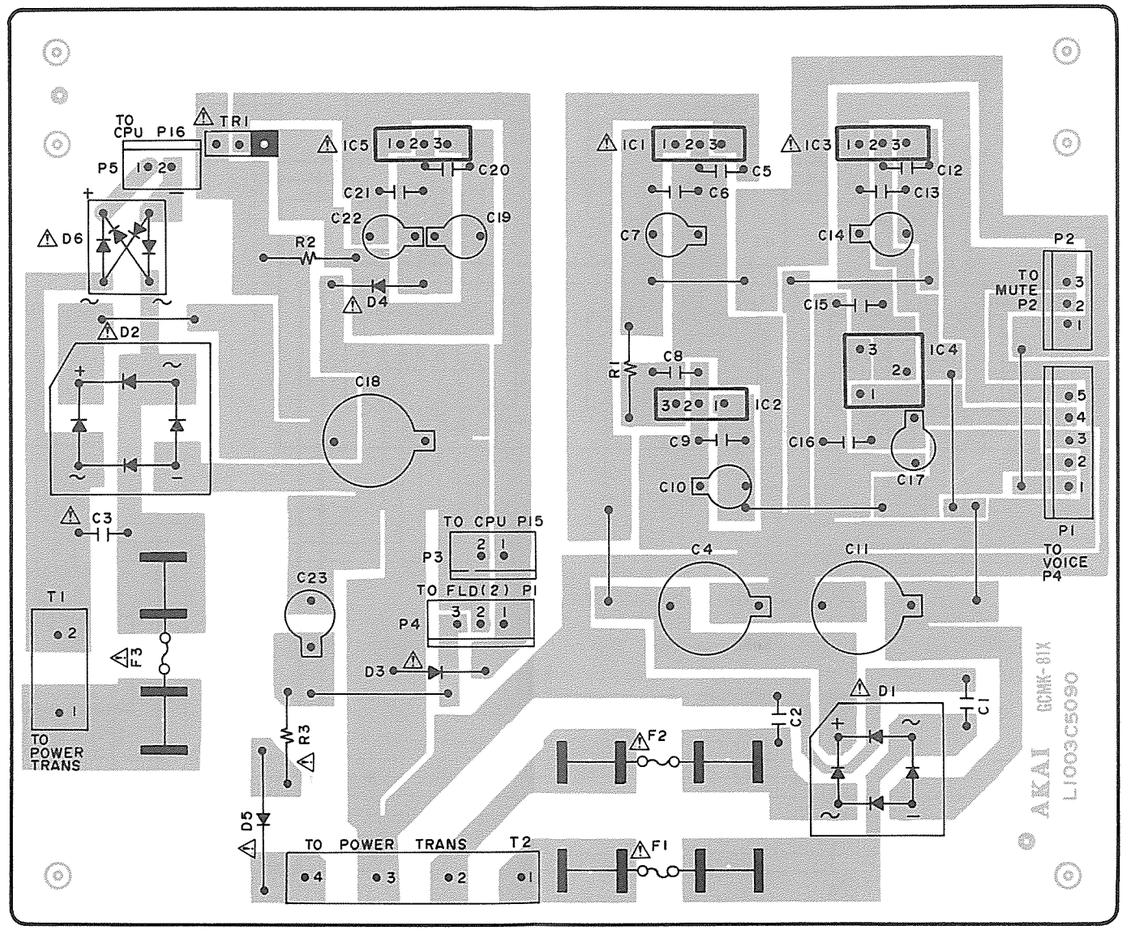

POWER SUPPLY PCB LI003C5090

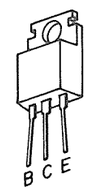

2SB507

WARNING: ⚠ INDICATES SAFETY CRITICAL COMPONENTS FOR CONTINUED SAFETY, REPLACE SAFETY CRITICAL COMPONENTS ONLY WITH MANUFACTURER'S RECOMMENDED PARTS

AVERTISSEMENT: ⚠ IL INDIQUE LES COMPOSANTS CRITIQUES DE SÉCURITÉ. POUR MAINTENIR LE DEGRÉ DE SÉCURITÉ DE L'APPAREIL, NE REMPLACER QUE DES PIÈCES RECOMMANDEES PAR LE FABRICANT

PNP TRANSISTER

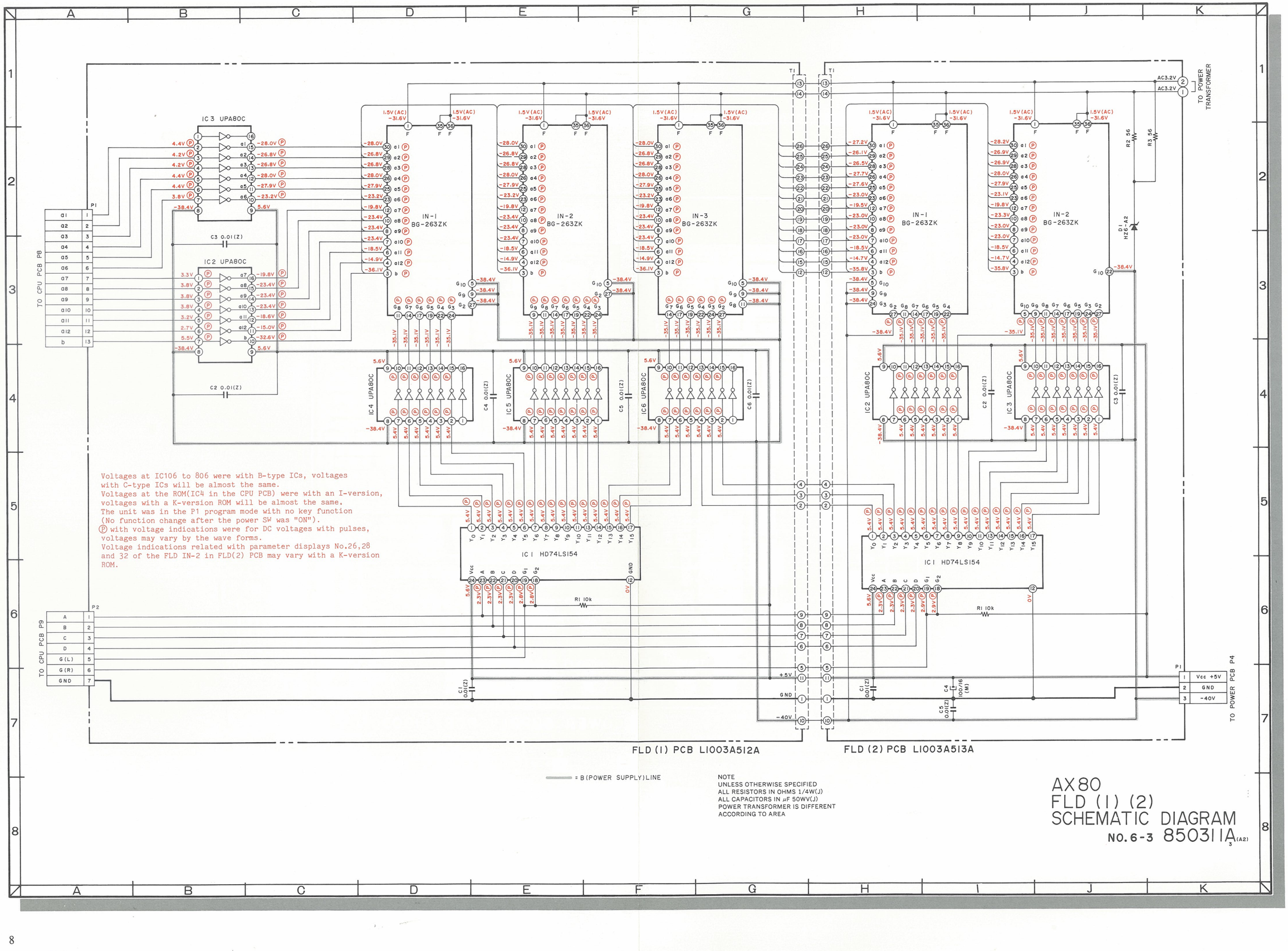

Voltages at IC106 to 806 were with B-type ICs, voltages with C-type ICs will be almost the same.
Voltages at the ROM(IC4 in the CPU PCB) were with an I-version, voltages with a K-version ROM will be almost the same.
The unit was in the P1 program mode with no key function (No function change after the power SW was "ON").
Ⓟ with voltage indications were for DC voltages with pulses, voltages may vary by the wave forms.
Voltage indications related with parameter displays No.26,28 and 32 of the FLD IN-2 in FLD(2) PCB may vary with a K-version ROM.

FLD (1) PCB L1003A512A

FLD (2) PCB L1003A513A

= B (POWER SUPPLY) LINE

NOTE
UNLESS OTHERWISE SPECIFIED
ALL RESISTORS IN OHMS 1/4W(J)
ALL CAPACITORS IN μF 50WV(J)
POWER TRANSFORMER IS DIFFERENT ACCORDING TO AREA

AX80
FLD (1) (2)
SCHEMATIC DIAGRAM
NO.6-3 850311A(A2)

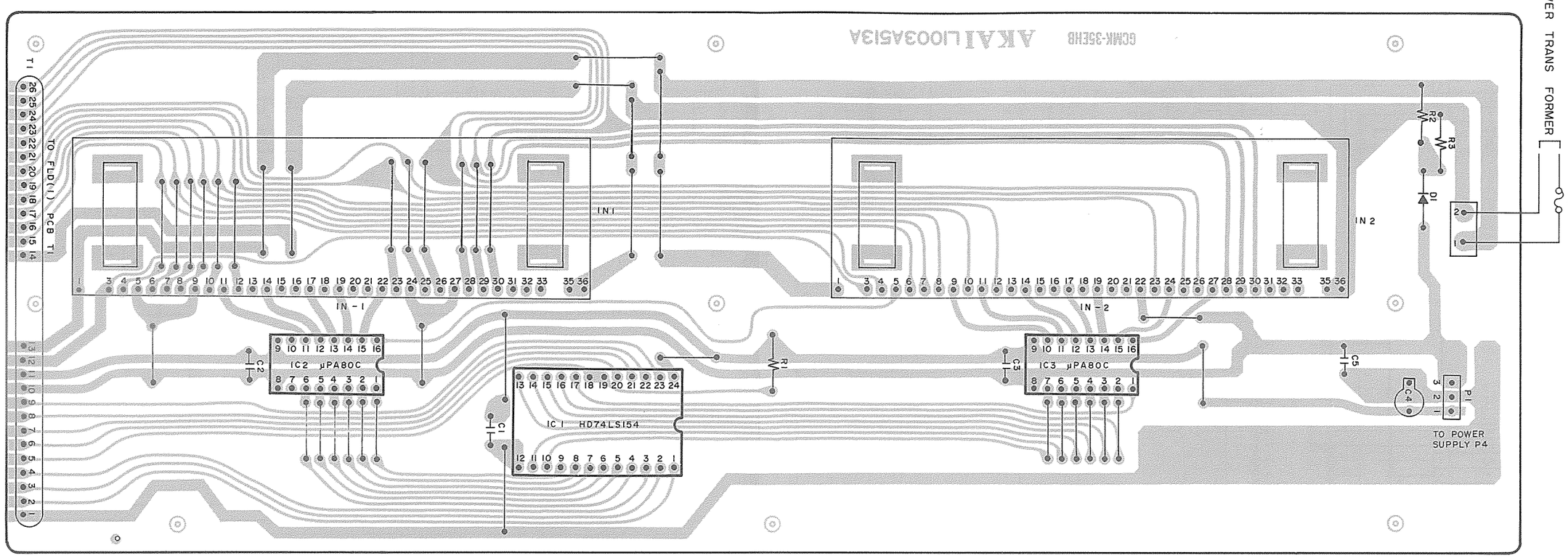

FLD (2) PCB L1003A513A

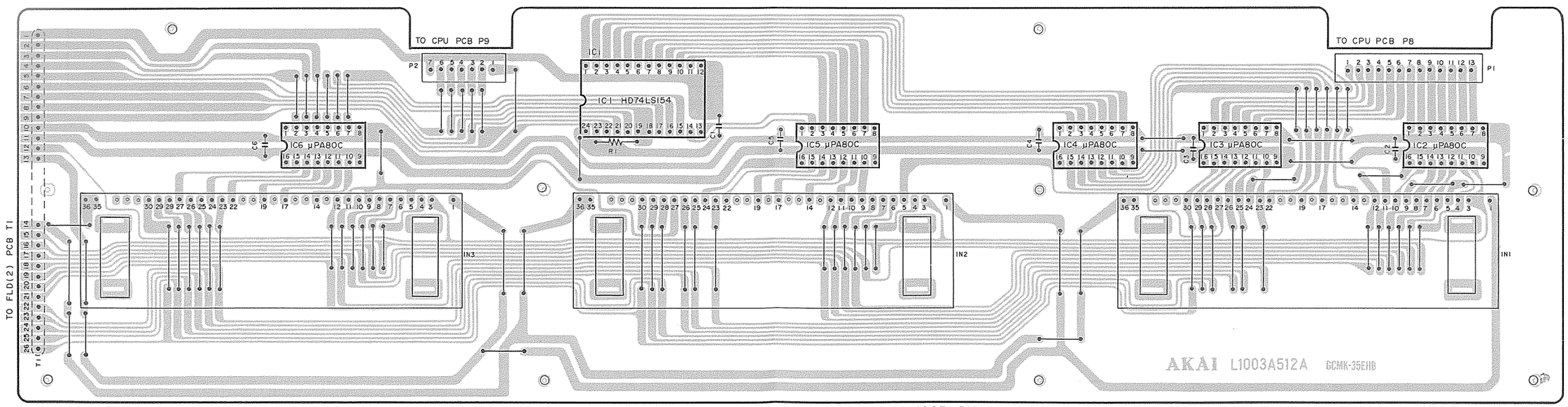

FLD(1) PCB L1003A512A

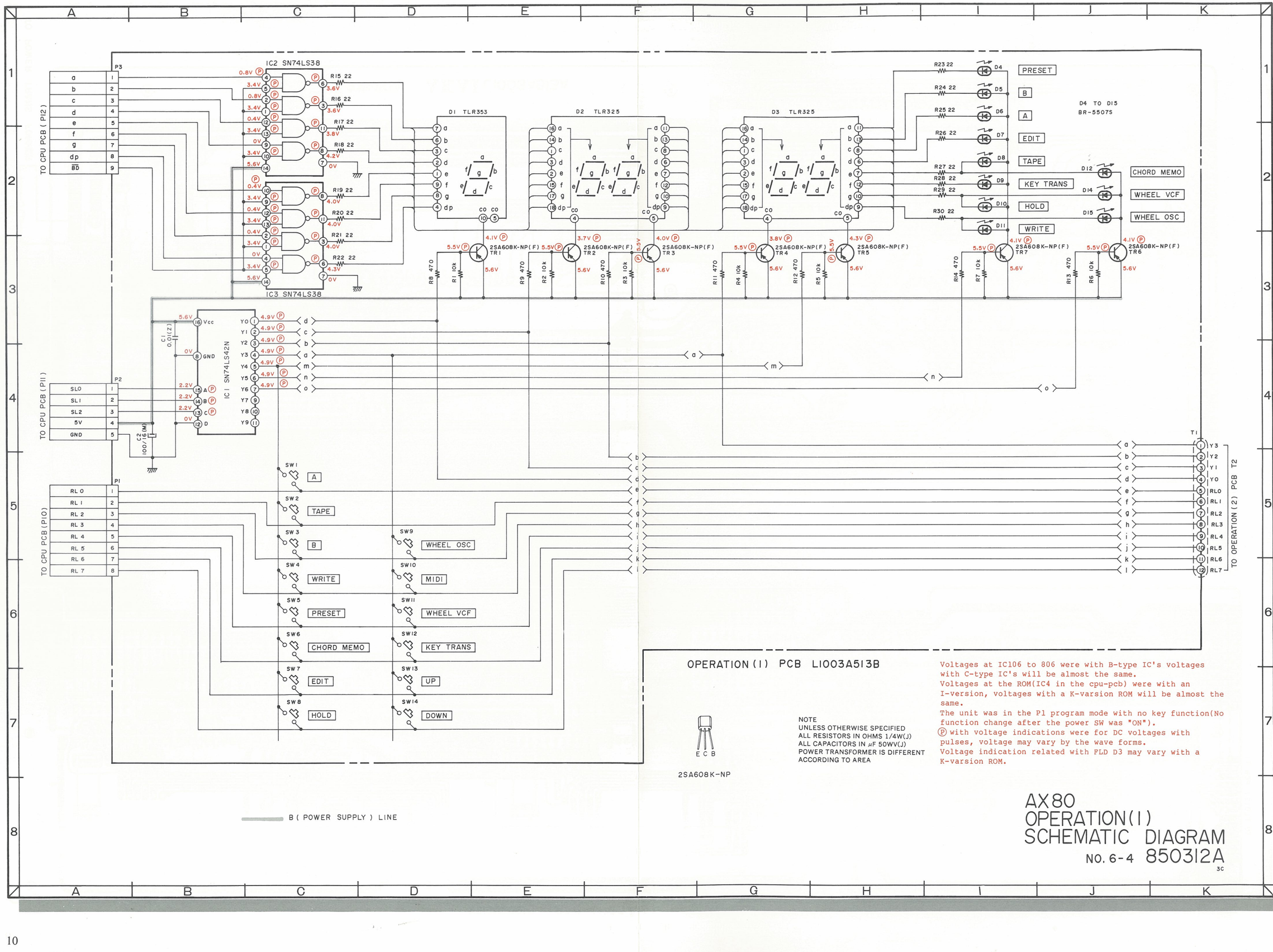

OPERATION (1) PCB L1003A513B

E C B

2SA608K-NP

NOTE
UNLESS OTHERWISE SPECIFIED
ALL RESISTORS IN OHMS 1/4W(J)
ALL CAPACITORS IN μF 50WV(J)
POWER TRANSFORMER IS DIFFERENT
ACCORDING TO AREA

Voltages at IC106 to 806 were with B-type IC's voltages with C-type IC's will be almost the same.
Voltages at the ROM(IC4 in the cpu-pcb) were with an I-version, voltages with a K-varsion ROM will be almost the same.
The unit was in the P1 program mode with no key function(No function change after the power SW was "ON").
Ⓟ with voltage indications were for DC voltages with pulses, voltage may vary by the wave forms.
Voltage indication related with FLD D3 may vary with a K-varsion ROM.

AX80 OPERATION(1) SCHEMATIC DIAGRAM

NO. 6-4 850312A

3C

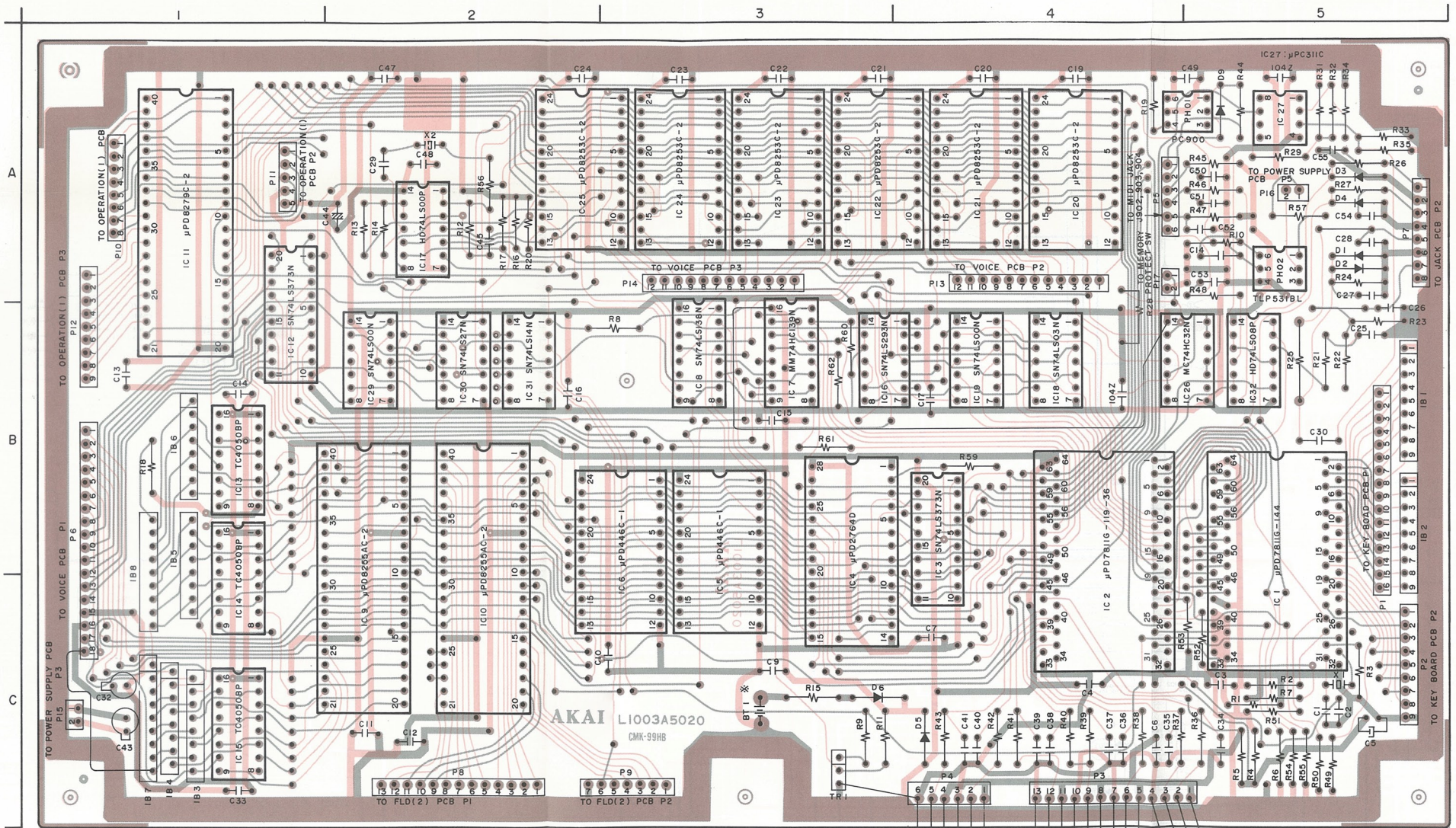

CPU PCB L1003A5020

B = TRANSISTOR

TR1 = 2SC536NP

2SC536NP

※ THIS UNIT EMPLOYS A LITHIOM BATTEM FIL MEMORY BACK UP. DO NOT OVER HEAT IT WITH A SOLDERING IROS TO AVOID EMPLOSION

LOCATION OF COMPONENTS

TR
TR1.....3C

ICs
IC1.....B5
IC2,3.....B4
IC4 to 8....B3
IC9,10.....C2
IC11,12.....A1
IC13,14.....B1
IC15.....C1
IC16.....B3
IC17.....A2
IC18,19.....B4
IC20,21.....A4
IC22 to 24..A3
IC25.....A2
IC26.....B5
IC27.....A5
IC29 to 31..B2
IC32.....B5

CONNECTOR
P1.....B5
P2.....C5
P3,4.....C4
P5.....A4
P6.....B1
P7.....A5
P8.....C2
P9.....C3
P10,11.....A1
P12.....B1
P13.....A4
P14.....A3
P15.....C1
P16.....A5
P17.....A4

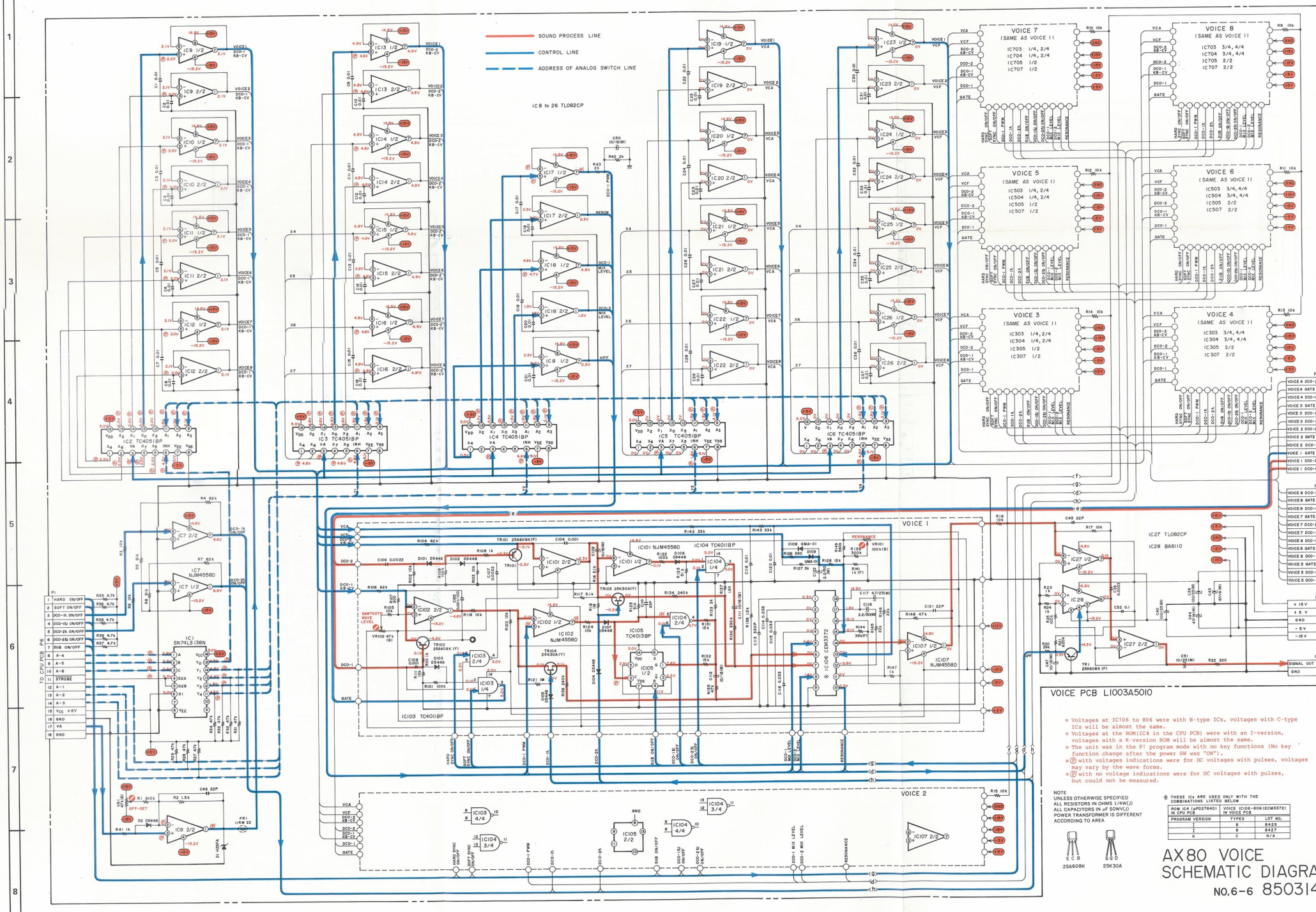
SOUND PROCESS LINE
CONTROL LINE
ADDRESS OF ANALOG SWITCH LINE
IC8 to 26 TL082CP
VOICE 1
VOICE 2
VOICE 3
VOICE 4
VOICE 5
VOICE 6
VOICE 7
VOICE 8
(SAME AS VOICE 1)
IC703 1/4, 2/4
IC704 1/4, 2/4
IC705 1/2
IC707 1/2
IC703 3/4, 4/4
IC704 3/4, 4/4
IC705 2/2
IC707 2/2
IC503 1/4, 2/4
IC504 1/4, 2/4
IC505 1/2
IC507 1/2
IC503 3/4, 4/4
IC504 3/4, 4/4
IC505 2/2
IC507 2/2
IC303 1/4, 2/4
IC304 1/4, 2/4
IC305 1/2
IC307 1/2
IC303 3/4, 4/4
IC304 3/4, 4/4
IC305 2/2
IC307 2/2
IC27 TL082CP
IC28 BA6110
TO CPU PCB P13
TO CPU PCB P14
TO POWER PCB P1
TO OUTPUT
VOICE PCB LI003A5010
NOTE
UNLESS OTHERWISE SPECIFIED
ALL RESISTORS IN OHMS 1/4W(J)
ALL CAPACITORS IN μF 50WV(J)
POWER TRANSFORMER IS DIFFERENT ACCORDING TO AREA
2SA608K
2SK30A
THESE ICs ARE USED ONLY WITH THE COMBINATIONS LISTED BELOW
ROM IC4 (μPD27C401) IN CPU PCB
VOICE IC106-806(ECM3372) IN VOICE PCB
PROGRAM VERSION
TYPES
LOT NO.
I
B
8425
J
B
8427
K
C
N/A
AX80 VOICE SCHEMATIC DIAGRAM
NO.6-6 850314A

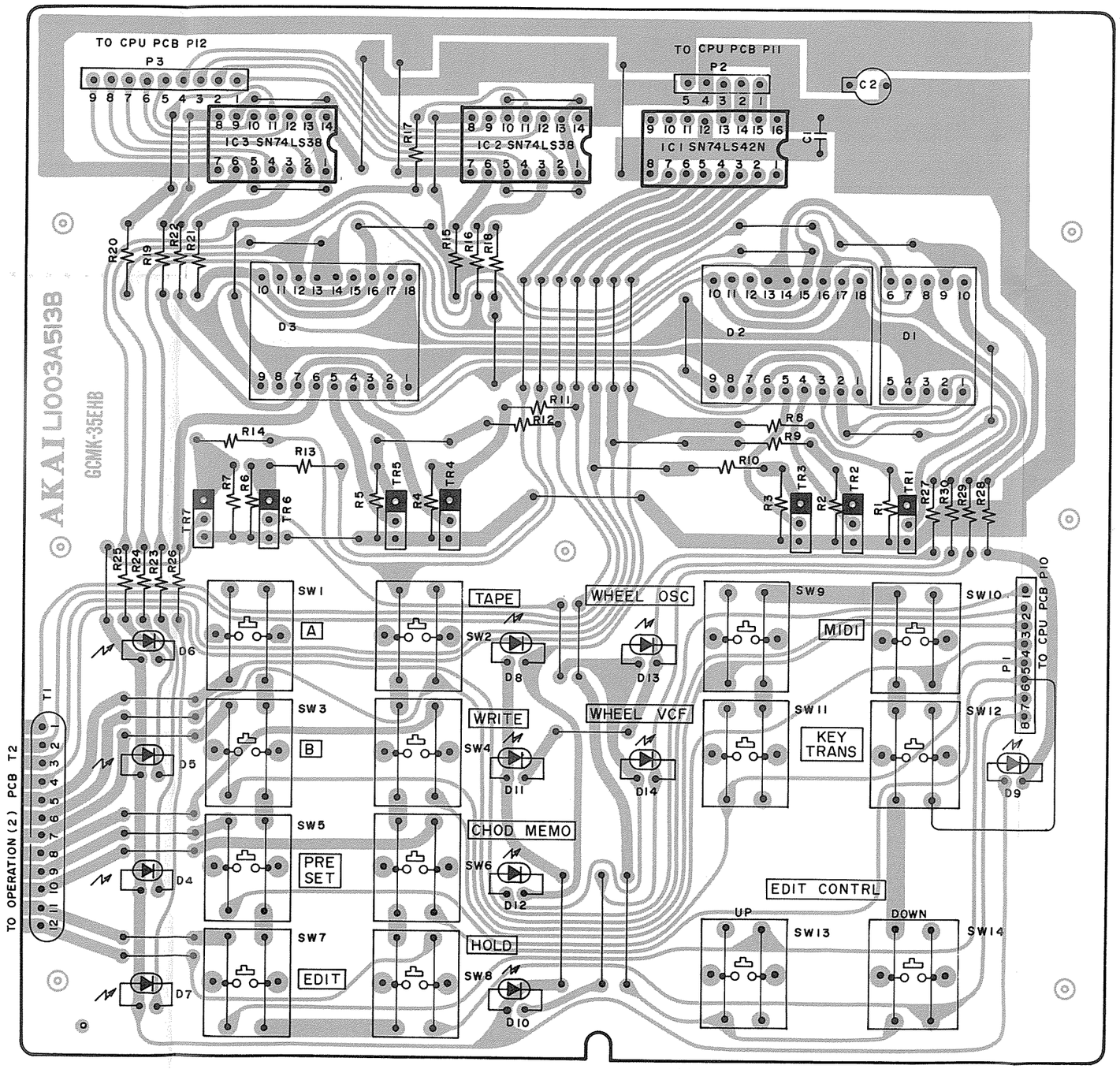

OPERATION (1) PCB L1003A513B

B
PNP TRANSISTER

TR1 to 7 2SA608K-NP

E C B

2SA608K-ND

AX80

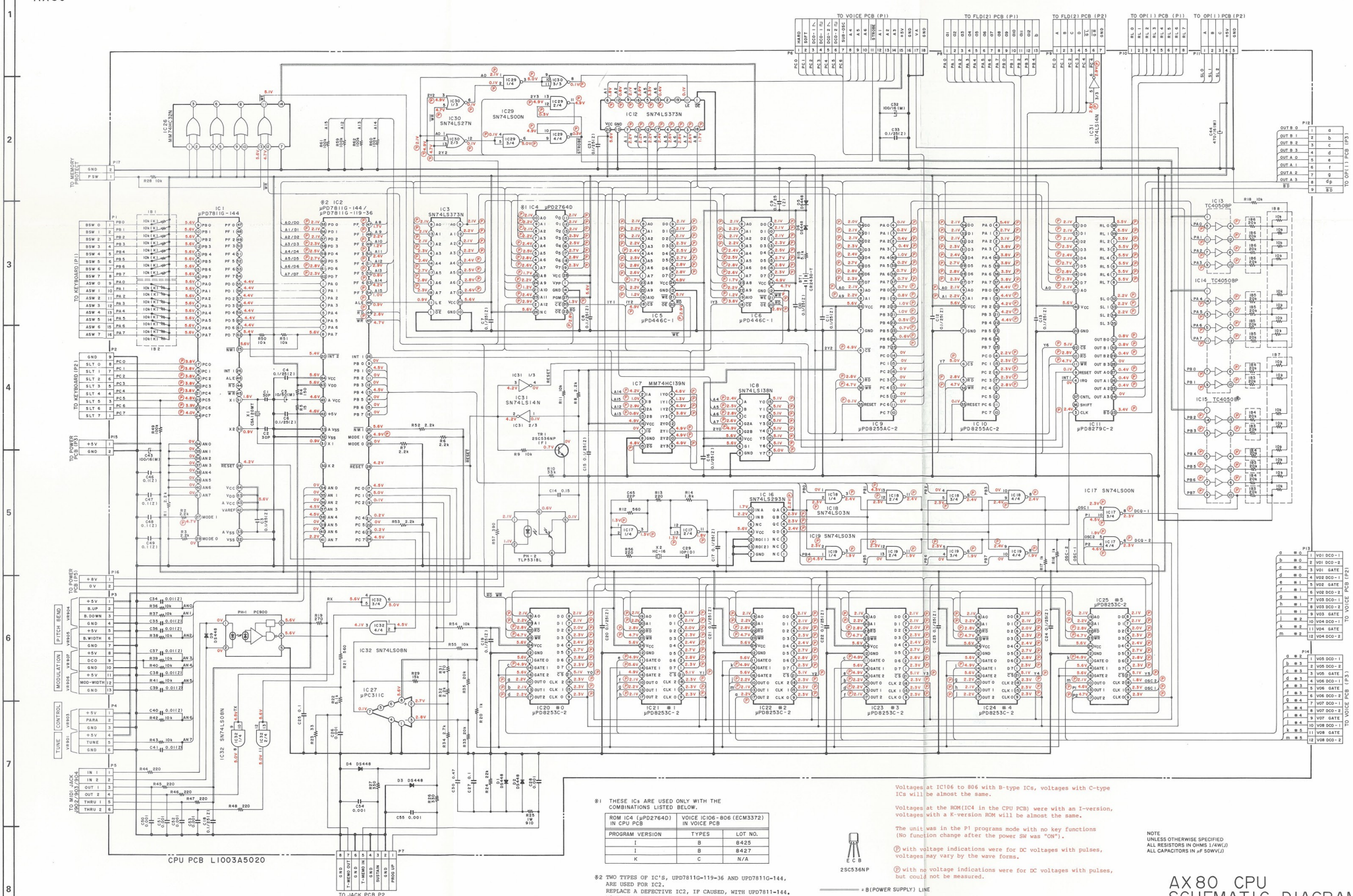

※1 THESE ICs ARE USED ONLY WITH THE COMBINATIONS LISTED BELOW.

ROM IC4 (μPD27640) IN CPU PCB	VOICE IC106-806 (ECM3372) IN VOICE PCB	
PROGRAM VERSION	TYPES	LOT NO.
I	B	8425
I	B	8427
K	C	N/A

※2 TWO TYPES OF IC'S, UPD7811G-119-36 AND UPD7811G-144, ARE USED FOR IC2. REPLACE A DEFECTIVE IC2, IF CAUSED, WITH UPD7811-144. NO PERIPHERAL CIRCUITS HAVE BEEN MODIFIED.

Voltages at IC106 to 806 with B-type ICs, voltages with C-type ICs will be almost the same.

Voltages at the ROM(IC4 in the CPU PCB) were with an I-version, voltages with a K-version ROM will be almost the same.

The unit was in the P1 programs mode with no key functions (No function change after the power SW was "ON").

Ⓟ with voltage indications were for DC voltages with pulses, voltages may vary by the wave forms.

Ⓟ with no voltage indications were for DC voltages with pulses, but could not be measured.

NOTE
UNLESS OTHERWISE SPECIFIED
ALL RESISTORS IN OHMS 1/4W(J)
ALL CAPACITORS IN μF 50WV(J)

= B(POWER SUPPLY) LINE

AX80 CPU SCHEMATIC DIAGRAM

NO.6-5 850313A

VOICE 8	VOICE 7	VOICE 6	VOICE 5	VOICE 4	VOICE 3	VOICE 2	VOICE 1
X PARTS NO.8xx = INDICATED VOICE8	X PARTS NO.7xx = INDICATED VOICE7	X PARTS NO.6xx = INDICATED VOICE6	X PARTS NO.5xx = INDICATED VOICE5	X PARTS NO.4xx = INDICATED VOICE4	X PARTS NO.3xx = INDICATED VOICE3	X PARTS NO.2xx = INDICATED VOICE2	X PARTS NO.1xx = INDICATED VOICE1

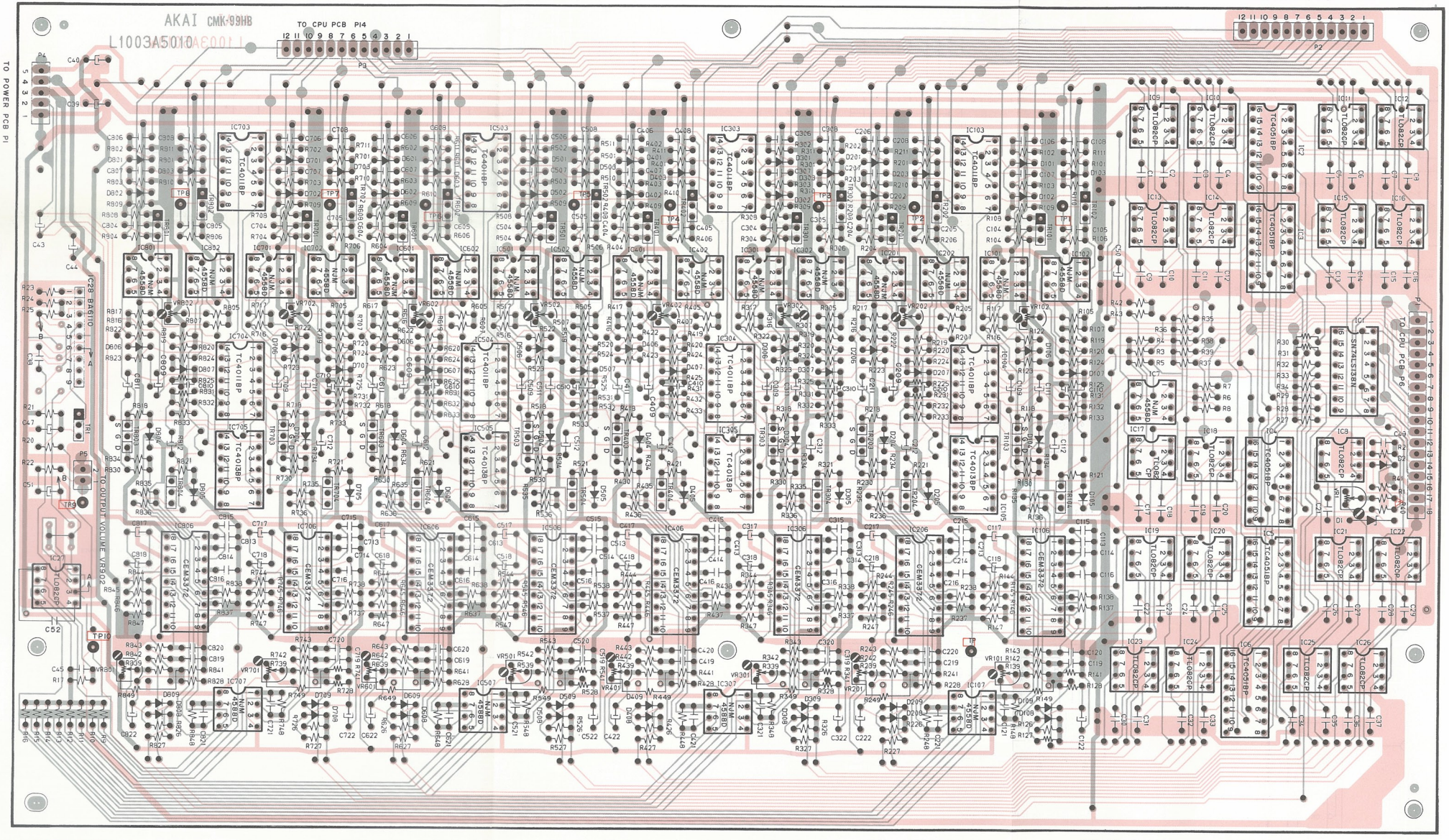

ADJUSTMENT PARTS

VR101.....VOICE1 RESONANCE
VR201.....VOICE2 RESONANCE
VR301.....VOICE3 RESONANCE
VR401.....VOICE4 RESONANCE
VR501.....VOICE5 RESONANCE
VR601.....VOICE6 RESONANCE
VR701.....VOICE7 RESONANCE
VR801.....VOICE8 RESONANCE

VR102.....VOICE1 SAWTOOTH WAVE LEVEL
VR202.....VOICE2 SAWTOOTH WAVE LEVEL
VR302.....VOICE3 SAWTOOTH WAVE LEVEL
VR402.....VOICE4 SAWTOOTH WAVE LEVEL
VR502.....VOICE5 SAWTOOTH WAVE LEVEL
VR602.....VOICE6 SAWTOOTH WAVE LEVEL
VR702.....VOICE7 SAWTOOTH WAVE LEVEL
VR802.....VOICE8 SAWTOOTH WAVE LEVEL

VR1.....OFF-SET

TR1,101,102,201,202,301,302,401,402
501,502,601,602,701,702,801,802.....2SA608K(F)
TR103,104,203,204,303,304,403,404
503,504,603,604,703,704,803,804.....2SK30A(Y)

VOICE PCB L1003A5010

WARNING: ⚠INDICATES SAFETY CRITICAL COMPONENTS FOR CONTINUED SAFETY. REPLACE SAFETY CRITICAL COMPONENTS ONLY WITH MANUFACTURER'S RECOMMENDED PARTS

AVERTISSEMENT: ⚠IL INDIQUE LES COMPOSANTS CRITIQUES DE SÉCURITÉ. POUR MAINTENIR LE DEGRÉ DE SÉCURITÉ DE L'APPAREIL, NE REMPLACER QUE DES PIÈCES RECOMMANDÉES PAR LE FABRICANT

μPD7811G-144 (CPU PCB-IC1)

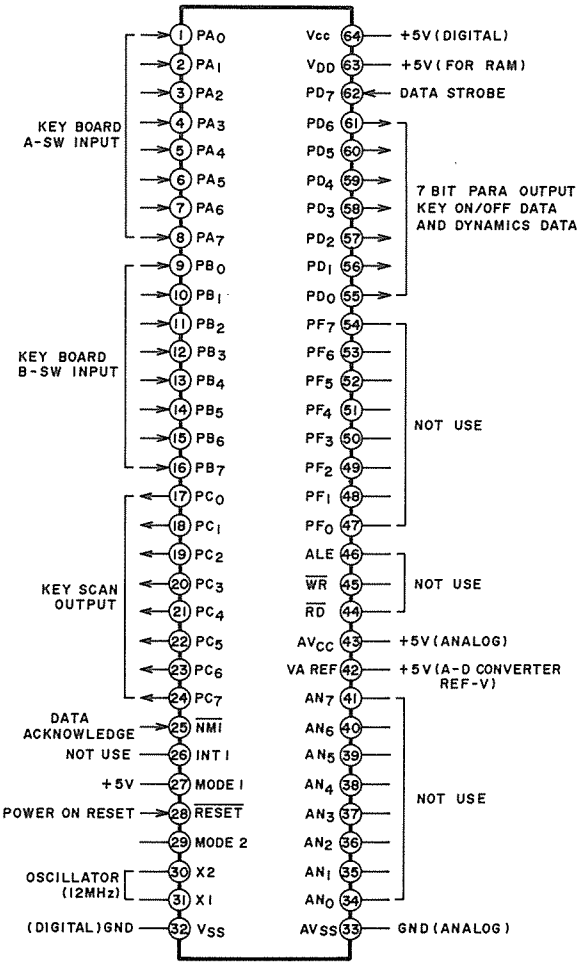

μPD781G-119 (CPU PCB-IC2)
μPD781G-144

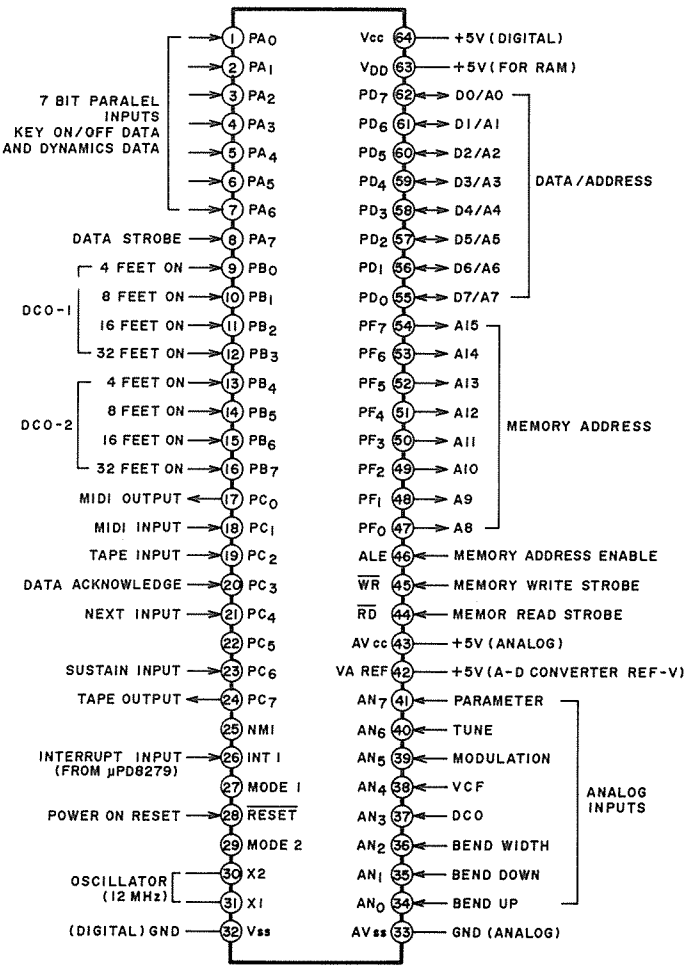

SECTION 4

SERVICE BULLETIN

- This section describes the information on techniques revisions and troubleshooting for servicing and adjusting AX80.
- To maintain the performance of **AX80**, see also **AX80** Service Manual for servicing and adjustment.
- Further technical information will be issued as any arises.
  Keep such information carefully under the name of this file.

0092

This Manual is FOR INTERNAL USE ONLY and must not be made available to unauthorized personal. No part of this manual may be reproduced in any form without permission from AKAI-ELECTRIC CO., LTD., Tokyo, Japan.

MODEL: AX80

INDEX

Bulletin No.	Subject No.	Description
AX80/1	001	Change of Voice Control IC
	002	IC TC4013BP name change

MODEL: AX80 No. AX80/1 DATE: April 1985

001 Subject: To improve performance

To improve sound quality, Voice Control IC (IC106 - 806 in Voice P.C. Board) CEM3372B has been changed to CEM3372C. The program of ROM IC (IC4 in CPU P.C. Board) uPD2764D-I has also been changed to uPD2764D-K.

	IC106 - 806	Part No.	IC4	Part No.
Old	CEM3372B	EI-354184	uPD2764D-I	EI-354145
New	CEM3372C	EI-359630	uPD2764D-K	EI-359631

When one of Voice Control IC is changed from Old type to New type and vise versa, it is necessary to replace all Voice Control ICs and ROM IC at the same time.

Changed from : January 1985
Interchangeability : Not interchangeable

The following shows how to identify old and new ICs.

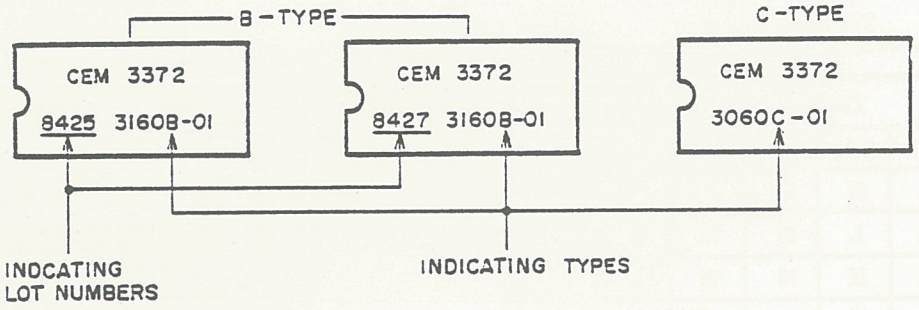

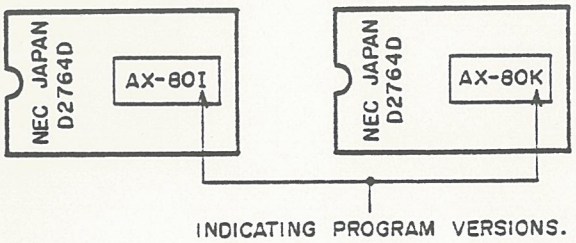

MODEL: AX80 No. AX80/1 DATE: April 1985

002 Subject: Parts information

Change of Part Name.
Because of the new type IC TC4013BP production, the IC manufacture has changed the name of old type IC TC4013BP to TC4013BAP. Old type IC TC4013BP and IC TC4013BAP are interchangeable.

Since old type TC4013BP and new type TC4013BP function differently, IC itself can not be substituted. However, this change should not affect the operation of AX80 even when a new TC4013BP is installed.

The new type IC can be identified by its Lot Number. The letter "B" will be added to its Lot Number.

Old type TC4013BP	8501H
New type TC4013BP	8522HB

The chart below shows the difference of their function.

OLD
TRUTH TABLE
TC4013BP

INPUTS				OUTPUTS	
CL	PR	D	CP△	Qn+1	$\bar{Q}$n+1
L	H	※	※	H	L
H	L	※	※	L	H
H	H	※	※	L	H
L	L	L	⌐‾	L	H
L	L	H	⌐‾	H	L
L	L	※	‾⌐	Qn•	$\bar{Q}$n•

※ : Don't Care
△ : Level Change
• : No Change

NEW
TRUTH TABLE
TC4013BP

INPUTS				OUTPUTS	
CL	PR	D	CP△	Qn+1	$\bar{Q}$n+1
L	H	※	※	H	L
H	L	※	※	L	H
H	H	※	※	H	H
L	L	L	⌐‾	L	H
L	L	H	⌐‾	H	L
L	L	※	‾⌐	Qn•	$\bar{Q}$n•

※ : Don't Care
△ : Level Change
• : No Change

MODEL: AX80

INDEX

Bulletin No.	Subject No.	Description
AX80/1	001	Change of Voice Control IC
	002	IC TC4013BP name change
AX80/2	003	For easier Voice P.C. B. adjustment
	004	Pitch bend, modulation VR change
	005	For easier Cut-off frequency adjustment
	006	Sub OSC oscillation countermeasure
	007	Osc X'tal costdown
	008	IC change information
	009	Parameter change in Edit mode countermeasure
AX80/3	010	Phone Amp Oscillation countermeasure
	011	Change of Voice Control IC and operation ROM IC.

No. AX-80/2 DATE: May 1985

MODEL: AX-80

009 Subject: Trouble countermeasure

To eliminate the problem of changing parameter in Edit mode by itself, especially on unit with IC uPD7811G-144 as IC2 on CPU P.C. Board, R4 on CPU P.C. Board has been changed from 150 to 82 FS.

Ref. No.	Prev.	New	Description
3-R4	150	82 FS 1/4W	ER-322421

Changed from : Februaly 1985
Service Ref. No. : SX-5066/K-706-85

No. AX80/3 DATE: August 1985

MODEL: AX80

010 Subject: Trouble countermeasure

Symptom : Oscillation in Phone Amp in Jack P.C. Board.
Countermeasure : A capacitor has been added in Phone Amp.

Ref. No.	Description
9-C7Z, 8Z	C CE 220J 50DC

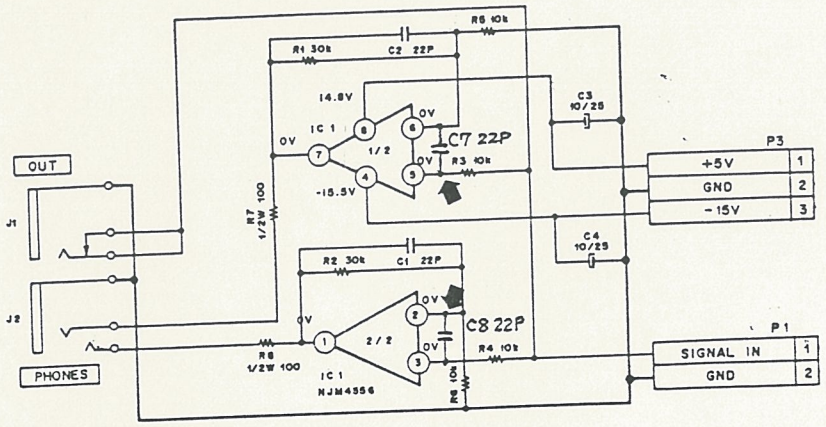

Changed from : June 1985
Service Ref. No. : CNA0552

MODEL: AX80 No. AX80/3 DATE: August 1985

011 Subject: Parts information

Because of the discontinuation of IC manufacture, IC CEM3372C in Voice P.C. Board has been changed to IC CEM3372D.
Accordingly, the program version of Operation ROM IC UPD2764D in CPU P.C. Board has also been changed from K version to L version.

	Ref. No.	Part No.	Description
(PREV.)	2-IC106B-806B	EI-359630	IC CEM3372C
(NEW)	2-IC106Z-806Z	EI-363530	IC CEM3372D
(PREV.)	3-IC4B	EI-359631	IC UPD2764D (K TYPE)
(NEW)	3-IC4Z	EI-363531	IC UPD2764D (L TYPE)

NOTE : IC CEM3372D has to be paired with IC UPD2764D (L TYPE) for proper operaion.
A/B Bank Sound Data are interchangeable.

Changed from : July 1983
Service Ref. No. : CNL0053

MODEL: AX-80

INDEX

Bulletin No.	Subject No.	Description
AX-80/1	001	Change of Voice Control IC
	002	IC TC4013BP name change
AX-80/2	003	For easier Voice P.C. B. adjustment
	004	Pitch bend, modulation VR change
	005	For easier Cut-off frequency adjustment
	006	Sub OSC oscillation countermeasure
	007	Osc X'tal costdown
	008	IC change information
	009	Parameter change in Edit mode countermeasure

MODEL: AX-80 No. AX-80/1 DATE: April 1985

001 Subject: To improve performance

To improve sound quality, Voice Control IC (IC106 - 806 in Voice P.C. Board) CEM3372B has been changed to CEM3372C. The program of ROM IC (IC4 in CPU P.C. Board) uPD2764D-I has also been changed to uPD2764D-K.

	IC106 - 806	Part No.	IC4	Part No.
Old	CEM3372B	EI-354184	uPD2764D-I	EI-354145
New	CEM3372C	EI-359630	uPD2764D-K	EI-359631

When one of Voice Control IC is changed from Old type to New type and vise versa, it is necessary to replace all Voice Control ICs and ROM IC at the same time.

Changed from : January 1985
Interchangeability : Not interchangeable

The following shows how to identify old and new ICs.

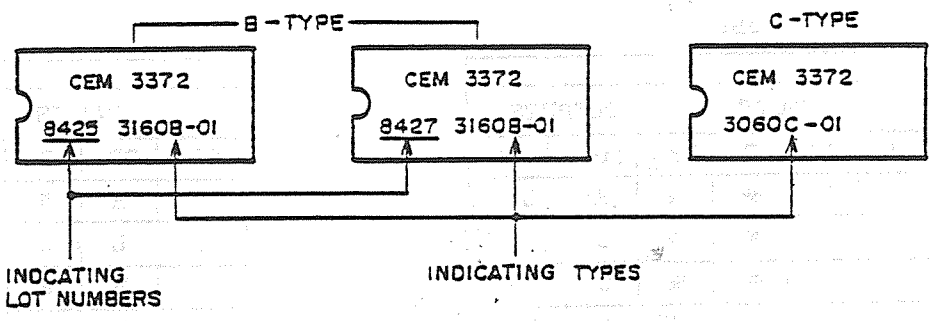

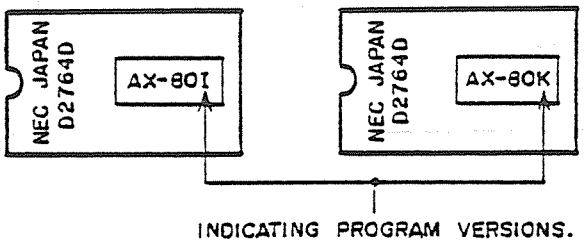

MODEL: AX-80 No. AX-80/1 DATE: April 1985

002 Subject: Parts information

Change of Part Name.
Because of the new type IC TC4013BP production, the IC manufacture has changed the name of old type IC TC4013BP to TC4013BAP. Old type IC TC4013BP and IC TC4013BAP are interchangeable.

Since old type TC4013BP and new type TC4013BP function differently, IC itself can not be substituted. However, this change should not affect the operation of AX-80 even when a new TC4013BP is installed.

The new type IC can be identified by its Lot Number. The letter "B" will be added to its Lot Number.

Old type TC4013BP	8501H
New type TC4013BP	8522HB

The chart below shows the difference of their function.

OLD
TRUTH TABLE
TC4013BP

INPUTS				OUTPUTS	
CL	PR	D	CP△	Qn+1	$\bar{Q}$n+1
L	H	※	※	H	L
H	L	※	※	L	H
H	H	※	※	L	H
L	L	L	⌐	L	H
L	L	H	⌐	H	L
L	L	※	⌐	Qn•	$\bar{Q}$n•

※ : Don't Care
△ : Level Change
• : No Change

NEW
TRUTH TABLE
TC4013BP

INPUTS				OUTPUTS	
CL	PR	D	CP△	Qn+1	$\bar{Q}$n+1
L	H	※	※	H	L
H	L	※	※	L	H
H	H	※	※	H	H
L	L	L	⌐	L	H
L	L	H	⌐	H	L
L	L	※	⌐	Qn•	$\bar{Q}$n•

※ : Don't Care
△ : Level Change
• : No Change

MODEL: AX-80 No. AX-80/2 DATE: May 1985

003 Subject: To improve performance

For the ease of the adjustment on Voice P.C. Board, the following parts have been changed.

Ref. No.	Previous	New
2-R105-805	10K	100K CB.
2-R124-824	10K	100K CB.
2-R139-839	300K (F)	750K CB.
2-R144-844	30K (F)	33K CB.

Changed from : Nov. 1984
Service ref. no. : BB-5406X, BB-5621X

MODEL: AX-80 No. AX-80/2 DATE: May 1985

004 Subject: Parts information

The following parts have been changed for the standardization of parts.
VR905 PITCH BEND, VR906 MODULATION.

Ref. No.	Part No.	Description
13-VR905, 906	Prev. EV-354255	VR ROTARY 16L10XOV B103
	New EV-358043	VR ROTARY 16L10X0X B103

Changed from : Nov. 1984
Service ref. no. : BB-5579X

MODEL: AX-80 No. AX-80/2 DATE: May 1985

005 Subject: To improve performance

For the ease of Cut-off Frequency adjustment, R139-839 on Voice P.C. Board have been changed from 750K to 680K.

Ref. No.	Previous	New
2-R139-839	750K	680K

Changed from : Dec. 1984
Service ref. no. : BB-5945X

MODEL: AX-80 No. AX-80/2 DATE: May 1985

006 Subject: Trouble countermeasure

To prevent the oscillation of Sub OSC, C110-810 on Voice P.C. Board have been changed form 33pF to 56pF.

Ref. No.	Part No.	Description
2-C110-810	EC-200488	C CE V F05 CH 560J 50DC

Changed from : Jan. 1985
Service ref. no. : BB-6124X

MODEL: AX-80 No. AX-80/2 DATE: May 1985

007 Subject: Parts information

The Oscillation X'tal X2 on CPU P.C. Board has been changed for the costdown purpose.

Ref. No.	Part No.		Description
3-X2	Prev.	EI-354168	OSC X'TAL HC-16 6.5548MHz
		EI-358944	OSC X'TAL NR-18 6.5548MHz
	New	EI-358966	OSC X'TAL NR-18 6.5536MHz

Changed from : Feb. 1985
Service ref. no. : BB-5895Z, BB-5993Z

MODEL: AX-80 No. AX-80/2 DATE: May 1985

008 Subject: Parts information

IC NJM4558D used on Voice P.C. Board has been changed to IC TL4558P, for the standardization of parts.

Ref. No.	Part No.		Description
2-IC7 2-IC101-801 2-IC102-802 2-IC107 2-IC307 2-IC507 2-IC707	Prev.	EI-213390	IC NJM4558D
	New	EI-338502	IC TL4558P

IC Socket for IC TL4558P has been added for IC-101-801

Ref. No.	Part No.	Description
2-S13-20	EJ-359147	Socket IC DILB 8P-8J

Changed from : Feb. 1985
Interchangeability : IC NJM4558D and IC TL4558P should not be used combined, since it might cause the imbalance of the output between Voices.
Service ref. no. : BB-6356X, BB-6207X

MODEL: AX-80 No. AX-80/2 DATE: May 1985

009 Subject: Trouble countermeasure

To eliminate the problem of changing parameter in Edit mode by itself, especially on unit with IC uPD7811G-144 as IC2 on CPU P.C. Board, R4 on CPU P.C. Board has been changed from 150 to 82 FS.

Ref. No.	Prev.	New	Description
3-R4	150	82 FS 1/4W	ER-322421

Changed from : Februaly 1985
Service Ref. No. : SX-5066/K-706-85

AKAI ELECTRIC CO., LTD.

12-14, 2-Chome, Higashi-Kojiya, Ohta-Ku, Tokyo, Japan

TEL: Tokyo (742) 5111 CABLE: HIFIAKAI TOKYO TELEX: J26261

Printed No. 850422-G1-1000 Printed Date: JUNE 18,1985

Printed in Japan